LG Business Solutions

SCHEDE E DISEGNI TECNICI
COMMERCIAL TV 2018

UPDATE GENNAIO 2018

SCHEDE E DISEGNI TECNICI
2018

LG Business Solutions

HOTEL TV
OLED

EV960H
65”

EW961H
65” | 55”

EV960H | Scheda Tecnica

LG Business Solutions

		65
DISPLAY	Type	OLED (Wallpaper)
	Resolution	3,840 x 2,160 (4K UHD)
	Brightness	400cd/m²
	Viewing Angle Degree	178° / 178°
	Response Time	5
BROADCASTING SYSTEM	Analog	PAL / SECAM
	Digital	DVB-T2/C/S2 (Varied by Countries)
VIDEO	Picture Engine	XD Engine
	Real Cinema 24p (3:3 Pull down)	•
	Aspect Ratio	• 6 modes (16:9, Original, Full wide, 4:3, Vertical Zoom, All-Direction Zoom)
	HDR	Dolby Vision™, HDR10
AUDIO	Audio Output / Speaker System	30W + 30W / 4.2ch
	Sound Mode	• 6 modes (Standard, Cinema, Clear Voice III, Sports, Music, Game)
	Clear Voice	• (Clear Voice III)
SOLUTIONS	Type	Pro:Centric® Smart, V, Direct
	Data Streaming (IP &RF)	•
	RF	• (1 Tuner)
	HCAP (SDK)	GEM / Flash /HTML5
	Pro:Centric Application	PCA 3.7
	DRM	Pro:Idiom®
SMART FEATURES	Smart UX	webOS 3.5, Commercial Smart Home, Web Browser, Pre-loaded Apps, SDP (Service Delivery Platform) compatibility, Magic Remote Ready
	Connectivity	SoftAP, WiFi (ac), ScreenShare (Miracast), SmartShare, DIAL, Bluetooth Sound Sync, LG Sound Sync
HOSPITALITY FEATURES		Hotel Mode, Lock Mode, Welcome Screen, Insert Image, One Channel Map, External Speaker Out, Instant ON, RJP Compatibility, External Power
GENERAL FEATURES	Installation	EzManager, USB Cloning
	Management	Wake on RF, WOL, Remote Diagnostics, TVLink Interactive, IR Out, Multi IR Code, HTNG/HDMI-CEC
	Setting Option	Auto Off/Sleep Timer, Smart Energy Saving, Motion Eye Care
	Anti-theft System	Kensington Lock (AIO Box)
INTERFACE	Rear	RF In (2), AV In (Phone Jack Type), Video Component In (Phone Jack Type), Digital Audio Out (Optical), HDMI Input (2), USB (2), RS-232C (Control & Service), RJ45 (2), External Speaker Out (2)
DIMENSION (Unit : mm)	W x H x D / weight (Screen)	1,450 x 825 x 3.85 / 7.6kg*
	W x H x D / weight (AIO)	1,260 x 78 x 198 / 10kg
	W x H x D / weight (Packing)	1,641 x 952 x 288 / 33kg
POWER (Unit : Watts)	Voltage, Hz	100-240V, 50/60Hz
	Max	542
	Typical	471
	Energy Saving (Min)	376.8
	Energy Saving (Med)	259.05
	Energy Saving (Max)	141.3
	Stand-by	0.3
ECO	ErP Class	B
	On Power Consumption (Watts)	175
	Luminance Ratio (%)	65
	Mercury Content (mg)	0
	Presence of Lead	Yes
	Average Annual Consumption (kWh)	256
STANDARD APPROVAL	Safety	CB, CU TR
	Environment	CE
	Etc.	RoHS, ErP
EAN		TBD

*Weight of Wall Mount is not included.

Connessioni

65EV960H

HDMI

MCR66649108

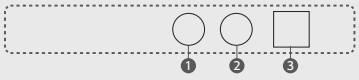

MCR66809102

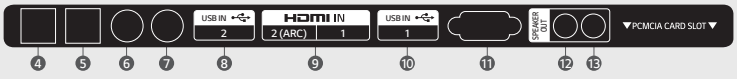

1. AV
2. COMPONENT
3. OPTICAL DIGITAL AUDIO OUT
4. AUX LAN
5. LAN
6. LNB Satellite IN
7. ANTENNA / CABLE IN
8. USB IN 2
9. HDMI IN
10. USB IN 1
11. RS-232C IN
12. STEREO 8Ω
13. VOLUME CONTROL

*I dati presenti in questa scheda tecnica sono soggetti a modifiche dovute ad aggiornamenti di prodotto. Vi invitiamo a consultare i manuali d'uso o il sito **www.lg.com/it** per verificare la congruità dei dati

EV960H | Disegno Tecnico

65”

Head : 1,450 x 825 x 3.85 / 7.6kg*

AIO (All In One) BOX : 1,260 x 78 x 198 / 10kg

Head

Front View

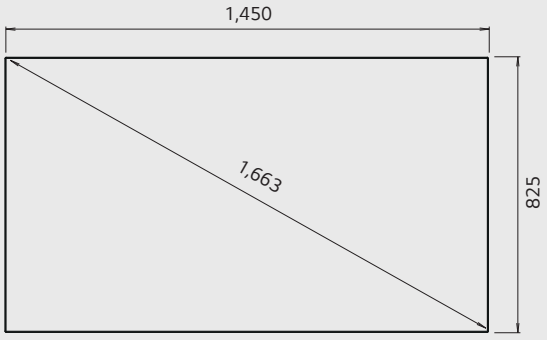

Back View (Wall Mount state)

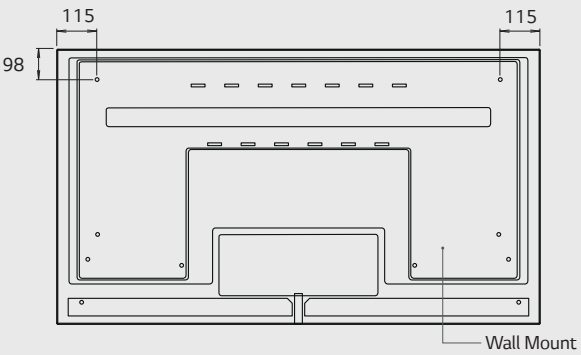

AIO (All In One) Box

Moving Off

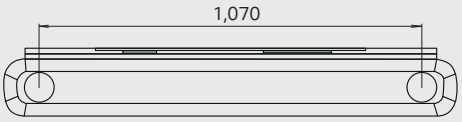

Top

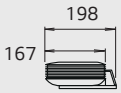

Side

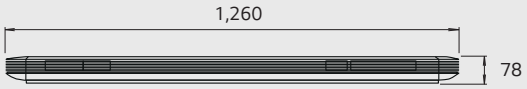

Front

Moving On

Front

*Weight of Wall Mount is not included.

EW961H | Scheda Tecnica

LG Business Solutions

			55	65
DISPLAY	Type		OLED	
	Resolution		3,840 x 2,160 (4K UHD)	
	Brightness		470	500
	Viewing Angle Degree		120° / 120°	
BROADCASTING SYSTEM	Analog		PAL / SECAM	
	Digital		DVB-T2/C/S2	
VIDEO	Triple XD Engine		•	
	Real Cinema 24p (3:3 Pull down)		•	
	Aspect Ratio		6 modes (Standard, Cinema, Clear Voice III, Sports, Music, Game)	
AUDIO	Audio Output / Speaker System		20W + 20W / 4.0 ch	
	Sound Mode		OLED Surround	
	Wireless Sound Sync		•	
	Clear Voice		•	
GENERAL FEATURES	Pro:Centric®	Type	Smart	
		Data Streaming (IP&RF)	•	
		Pro:Centric Application	PCA 3.7	
		RF (1/2 Tuner)	RF (1)	
		HCAP (SDK)	GEM / Flash / HTML5	
	Smart Features		Commercial Smart Home, Web Browser, softAP, Magic Remote Ready	
	Connectivity		Smart Share (WiDi, WiFi Direct, DIAL), Screen Share, Bluetooth Sound Sync.	
	DRM (Digital Right Management)		Pro:Idiom	
	Management		Remote Diagnostics, EzManager (for initial configuration)	
	Interactivity		HTNG/HDMI-CEC	
	RJP Interface		RS232C, HDMI	
	Advanced Setting Option		Auto Off / Auto Sleep, Motion Eye Care, Smart Energy Saving	
	Anti-theft System		Kensington Lock	
HOSPITALITY FEATURES			Welcome Screen, One Channel Map, Lock Mode, Hotel Mode, Multi-IR Code, USB Cloning, TV Link Interactive, SNMP, IR Out, External Speaker Out, External Power, Instant On	
INTERFACE	Side		HDMI In, USB 3.0, USB 2.0 (2), CI Slot	
	Rear		RF In (2), AV In, Video Component In, Digital Audio Out (Optical), HDMI Input, RS-232C, Headphone Out, LAN Port (2), External Speaker Out (2)	
CABINET (Unit :mm)	Vesa		300 x 200	
	WxHxD / weight (With Stand)		1,229 x 759 x 225 / 18.6kg	1,451 x 882 x 225 / 25.4kg
	WxHxD / weight (Carton)		1,451 x 826 x 228 / 25.1kg	1,663 x 927 x 212 / 33.5kg
POWER (Unit : Watts)	Voltage, Hz		100~240V, 50 / 60 Hz	
	Max		296.9	328.3
	Typical		253.1	283.5
	Energy saving (Min)		202.5	226.8
	Energy saving (Med)		139.2	155.9
	Energy saving (Max)		75.9	85.1
	Stand-by		0.3	
STANDARD APPROVAL	Safety		CB , CU TR	
	Environment		CE	
	Etc.		ROHS, ErP	
	Eco	ErP Class	TBD	B
		On Power Consumption	152W	161W
		Luminance Ratio	65%	
		Mercury Content	0 mg	
		Presence of Lead	Yes	
		Average Annual Consumption (kWh)	222	235
EAN			8806087917963	8806087917628

Connessioni

65EW961H / 55EW961H

HDMI HIGH-DEFINITION MULTIMEDIA INTERFACE

❶ SPEAKER OUT
❷ AUX LAN
❸ LAN
❹ H/P OUT
❺ HDMI IN 1
❻ OPTICAL DIGITAL AUDIO OUT
❼ RS-232C IN
❽ AV IN
❾ COMPONENT IN
❿ LNB Satellite IN
⓫ ANTENNA / CABLE IN
⓬ USB IN 1 / USB IN 2
⓭ HDMI IN 2
⓮ USB IN 3

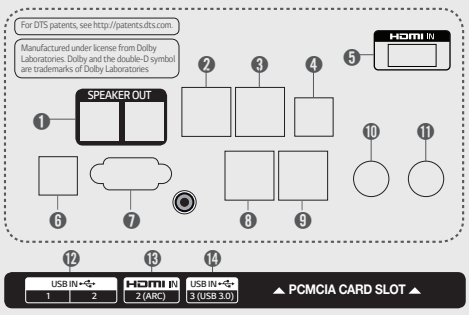

*I dati presenti in questa scheda tecnica sono soggetti a modifiche dovute ad aggiornamenti di prodotto. Vi invitiamo a consultare i manuali d'uso o il sito **www.lg.com/it** per verificare la congruità dei dati

EW961H | Disegno Tecnico

65"

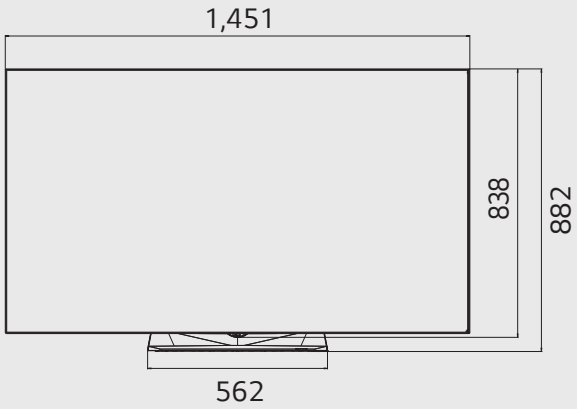

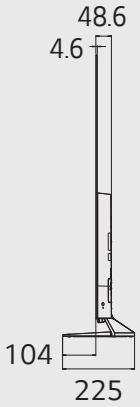

55"

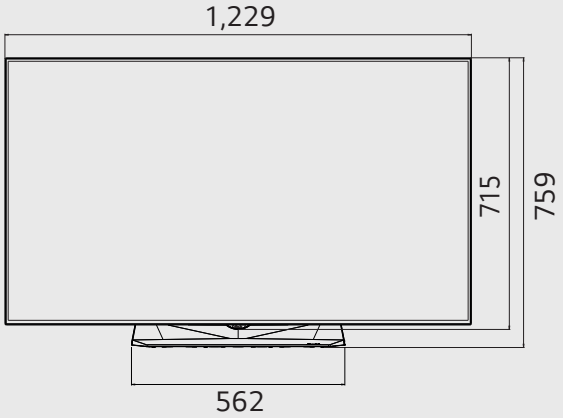

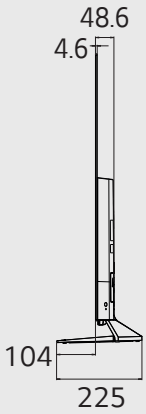

SCHEDE E DISEGNI TECNICI
2018

LG Business Solutions

HOTEL TV
ULTRA HD

UV761H
65” | 55” | 49” | 43”

UV661H
55” | 49” | 43”

UV761H | Scheda Tecnica

LG Business Solutions

		43	49	55	65
DISPLAY	Type	Edge LED			
	Resolution	3,840 x 2,160 (4K UHD)			
	Brightness	330cd/m²			
	Viewing Angle Degree	178° / 178°			
	Response Time	8			
BROADCASTING SYSTEM	Analog	PAL / SECAM			
	Digital	DVB-T2/C/S2			
VIDEO	Picture Engine	XD Engine			
	Real Cinema 24p (3:3 Pull down)	•			
	Aspect Ratio	• 6 modes (16:9, Original, Full wide, 4:3, Vertical Zoom, All-Direction Zoom)			
	HDR	Dolby Vision™, HDR10			
AUDIO	Audio Output / Speaker System	10W + 10W / 2.0 ch			
	Sound Mode	• 6 modes (Standard, Cinema, Clear Voice III, Sports, Music, Game)			
	Clear Voice	• (Clear Voice III)			
SOLUTION	Type	Pro:Centric® Smart, V, Direct			
	Data Streaming (IP &RF)	•			
	RF	• (1 Tuner)			
	HCAP (SDK)	GEM / Flash /HTML5			
	Pro:Centric Application	PCA 3.7			
	Digital Right Management	Pro:Idiom			
SMART	Smart UX	webOS 3.5, Commercial Smart Home, Web Browser, Pre-loaded Apps, SDP (Service Delivery Platform) compatibility, Magic Remote Ready			
	Connectivity	SoftAP, WiFi (ac), ScreenShare (Miracast), SmartShare, DIAL, Bluetooth Sound Sync, LG Sound Sync			
HOSPITALITY FEATURES		Hotel Mode, Lock Mode, Welcome Screen, Insert Image, External Speaker Out, Instant ON, One Channel Map, External Power, RJP Compatibility, External Clock Compatibility, RTC (Real Time Clock), webRTC Ready			
GENERAL FEATURES	Installation	EzManager, USB Cloning			
	Management	Wake on RF, WOL, SNMP, Remote Diagnostics, TVLink Interactive, IR Out, Multi IR Code, HTNG/HDMI-CEC			
	Setting Option	Auto Off/Sleep Timer, Smart Energy Saving, Motion Eye care			
	Anti-theft System	Kensington Lock, Credenza/Security Screw Hole, Lock Down Plate			
INTERFACE	Side	HDMI In, USB 2.0, USB 3.0, CI Slot			
	Rear	RF In (2), AV In, Video Component In (Phone Jack Type), Digital Audio Out (Optical), HDMI Input, RS-232C, Headphone Out, Clock Interface, RJ45 (2), External Speaker Out (2)			
DIMENSION (Unit : mm)	Vesa	200 x 200	300 x 300		
	W x H x D / weight (with stand)	967.6 x 617.2 x 303 / 13.4kg	1,100.1 x 695.8 x 303 / 15.9kg	1,236 x 770.7 x 303 / 18.5kg	1,455.2 x 898.1 x 312.4 / 25.5kg
	W x H x D / weight (Packing)	1,180 x 660 x 190 / 15.4kg	1,193 x 742 x 190 / 18.9kg	1,360 x 860 x 190 / 23.5kg	1,600 x 1,035 x 190 / 33.1kg
POWER (Unit : Watts)	Voltage, Hz	100~240V, 50 / 60 Hz			
	Max	139.7	157.6	157.0	197.0
	Typical	114.2	130.9	132.0	170.0
	Energy Saving (Min)	79.0	90.0	91.0	116.0
	Energy Saving (Med)	57.0	65.0	67.0	85.0
	Energy Saving (Max)	35.0	40.0	41.0	52.0
	Stand-by	0.3			
ECO	ErP Class	A	A	A+	A+
	On Power Consumption (W)	69	79	81	100
	Luminance Ratio (%)	65			
	Mercury Content (mg)	0			
	Presence of Lead	Yes			
	Average Annual Consumption (kWh)	101	115	118	146
STANDARD APPROVAL	Safety	CB, CU TR			
	Environment	CE			
	Etc.	RoHS, ErP			
EAN		8806084674708	8806084675408	8806084654489	TBD

Connessioni

65UV761H / 55UV761H / 49UV761H / 43UV761H

1. RS-232C IN
2. H/P OUT
3. CLOCK
4. OPTICAL DIGITAL AUDIO OUT
5. AUX LAN
6. LAN
7. HDMI IN 1
8. COMPONENT IN / AV IN
9. SPEAKER OUT
10. LNB Satellite IN
11. ANTENNA / CABLE IN
12. USB IN 1
13. HDMI IN 2
14. USB IN 2

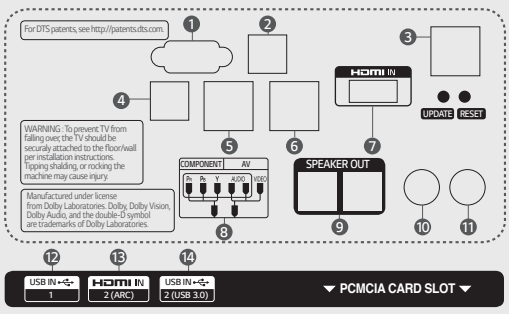

*I dati presenti in questa scheda tecnica sono soggetti a modifiche dovute ad aggiornamenti di prodotto. Vi invitiamo a consultare i manuali d'uso o il sito **www.lg.com/it** per verificare la congruità dei dati

UV761H | Disegno Tecnico

LG Business Solutions

65”

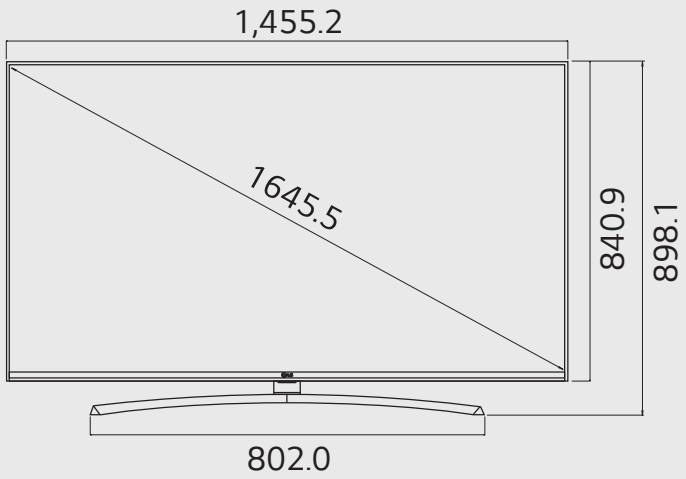

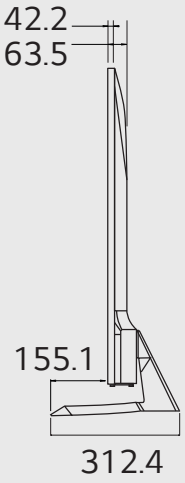

43”
49”
55”

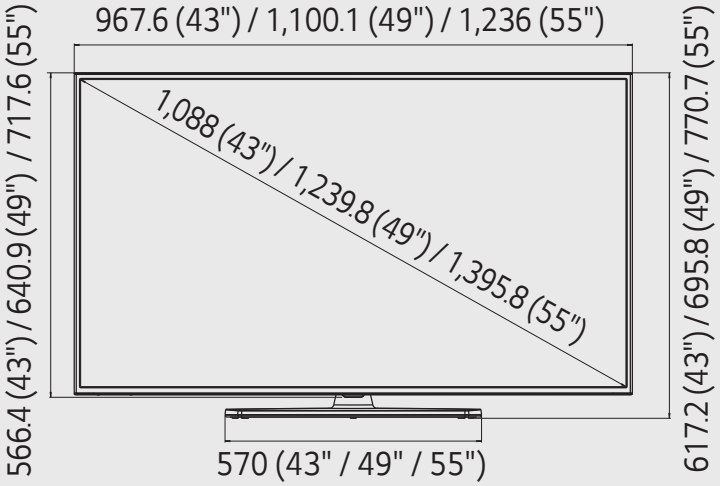

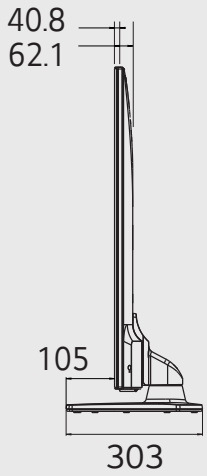

UV661H | Scheda Tecnica

LG Business Solutions

		43	49	55
DISPLAY	Type	Edge LED		
	Resolution	3,840 x 2,160 (4K UHD)		
	Brightness	400cd/m²		500cd/m²
	Viewing Angle Degree	178° / 178°		
	Response Time	8		
BROADCASTING SYSTEM	Analog	PAL / SECAM		
	Digital	DVB-T2/C/S2		
VIDEO	Picture Engine	XD Engine		
	Real Cinema 24p (3:3 Pull down)	•		
	Aspect Ratio	• 6 modes (16:9, Original, Full wide, 4:3, Vertical Zoom, All-Direction Zoom)		
	HDR	HDR10		
AUDIO	Audio Output / Speaker System	10W + 10W / 2.0 ch		
	Sound Mode	• 6 modes (Standard, Cinema, Clear Voice III, Sports, Music, Game)		
	Clear Voice	• (Clear Voice III)		
SOLUTION	Type	Pro:Centric® Smart, V, Direct		
	Data Streaming (IP &RF)	•		
	RF	• (1 Tuner)		
	HCAP (SDK)	GEM / Flash /HTML5		
	Pro:Centric Application	PCA 3.7		
	Digital Right Management	Pro:Idiom		
SMART	Smart UX	webOS 3.5, Commercial Smart Home, Web Browser, Pre-loaded Apps, SDP (Service Delivery Platform) compatibility, Magic Remote Ready		
	Connectivity	SoftAP, WiFi (ac), ScreenShare (Miracast), SmartShare, DIAL, Bluetooth Sound Sync, LG Sound Sync		
HOSPITALITY FEATURES		Hotel Mode, Lock Mode, Welcome Screen, Insert Image, External Speaker Out, Instant ON, One Channel Map, External Power, RJP Compatibility, External Clock Compatibility, RTC (Real Time Clock), webRTC Ready		
GENERAL FEATURES	Installation	EzManager, USB Cloning		
	Management	Wake on RF, WOL, SNMP, Remote Diagnostics, TVLink Interactive, IR Out, Multi IR Code, HTNG/HDMI-CEC		
	Setting Option	Auto Off/Sleep Timer, Smart Energy Saving, Motion Eye care		
	Anti-theft System	Kensington Lock, Credenza/Security Screw Hole, Lock Down Plate		
INTERFACE	Side	HDMI In, USB 2.0, USB 3.0, CI Slot		
	Rear	RF In (2), AV In, Video Component In (Phone Jack Type), Digital Audio Out (Optical), HDMI Input, RS-232C In (Control & Service), Headphone Out, Clock Interface, RJ45 (2), External Speaker Out (2)		
DIMENSION (Unit : mm)	Vesa	200 x 200	300 x 300	
	W x H x D / weight (with stand)	977 x 630 x 303 / 11.2kg	1,110 x 705 x 303 / 14.5kg	1,249 x 783 x 303 / 17.4kg
	W x H x D / weight (Packing)	1,147 x 660 x 175 / 13.9kg	1,296 x 770 x 171 / 17.2kg	1,410 x 860 x 207 / 22.5kg
POWER (Unit : Watts)	Voltage, Hz	100~240V, 50 / 60 Hz		
	Max	116.8	137.7	169.7
	Typical	91.0	110.7	142.6
	Energy Saving (Min)	78.1	86	97
	Energy Saving (Med)	57.0	61	71
	Energy Saving (Max)	37.0	40	43
	Stand-by	0.3		
ECO	ErP Class	A	A	A
	On Power Consumption (W)	68	79	101
	Luminance Ratio (%)	65		
	Mercury Content (mg)	0		
	Presence of Lead	Yes		
	Average Annual Consumption (kWh)	99	115	147
STANDARD APPROVAL	Safety	CB, CU TR		
	Environment	CE		
	Etc.	RoHS, ErP		
EAN		8806098053308	8806098053315	8806098053322

Connessioni

55UV661H / 49UV661H / 43UV661H

HDMI HIGH-DEFINITION MULTIMEDIA INTERFACE

1. RS-232C IN
2. H/P OUT
3. CLOCK
4. OPTICAL DIGITAL AUDIO OUT
5. AUX LAN
6. LAN
7. HDMI IN 1
8. COMPONENT IN / AV IN
9. SPEAKER OUT
10. LNB SATELLITE IN
11. ANTENNA / CABLE IN
12. USB IN 1
13. HDMI IN 2
14. USB IN 2

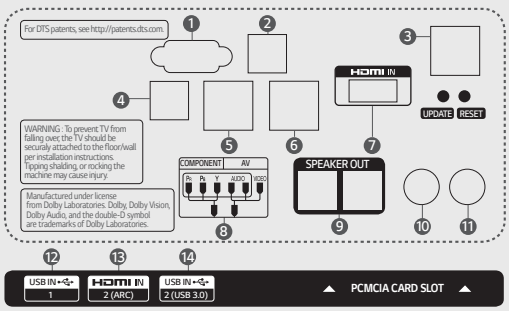

*I dati presenti in questa scheda tecnica sono soggetti a modifiche dovute ad aggiornamenti di prodotto. Vi invitiamo a consultare i manuali d'uso o il sito **www.lg.com/it** per verificare la congruità dei dati

UV661H | Disegno Tecnico

43”
49”
55”

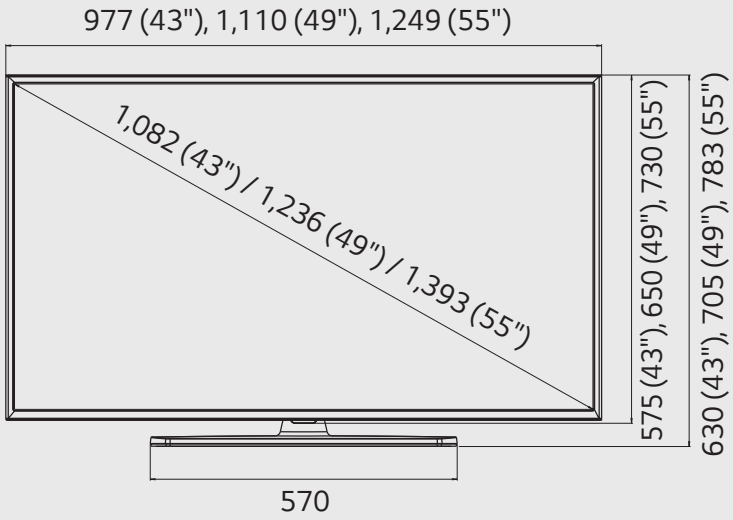

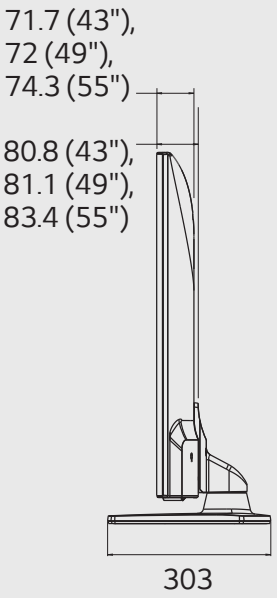

SCHEDE E DISEGNI TECNICI
2018

LG | Business Solutions

HOTEL TV
FULL HD

LV761H
55" | 49" | 43" | 32"

LV761H
HD READY 28" | 24"

LX761H
55" | 49" | 43"

LV661H
49" | 43"

LV541H
55" | 49" | 43" | 32"

LV341H
55" | 49" | 43" | 32"

LV761H | Scheda Tecnica

LG Business Solutions

		32	43	49	55
DISPLAY	Type	Direct LED			Edge LED
	Resolution	1,920 x 1,080 (FHD)			
	Brightness	240cd/m²	400cd/m²		
	Viewing Angle Degree	178° / 178°			
	Response Time	9			
BROADCASTING SYSTEM	Analog	PAL / SECAM			
	Digital	DVB-T2/C/S2			
VIDEO	Picture Engine	XD Engine			
	Real Cinema 24p (3:3 Pull down)	•			
	Aspect Ratio	• 6 modes (16:9, Original, Full wide, 4:3, Vertical Zoom, All-Direction Zoom)			
AUDIO	Audio Output / Speaker System	5W + 5W / 2.0ch	10W + 10W / 2.0 ch		
	Sound Mode	• 6 modes (Standard, Cinema, Clear Voice III, Sports, Music, Game)			
	Clear Voice	• (Clear Voice III)			
SOLUTION	Type	Pro:Centric® Smart, V, Direct, Quick Menu (TV Embedded Home UI)			
	Data Streaming (IP &RF)	•			
	RF	• (1 Tuner)			
	HCAP (SDK)	GEM / Flash /HTML5			
	Pro:Centric Application	PCA 3.7			
	Digital Right Management	Pro:Idiom			
SMART FEATURES	Smart UX	webOS 3.5, Commercial Smart Home, Web Browser, Pre-loaded Apps, SDP(Service Delivery Platform) compatibility, Magic Remote Ready			
	Connectivity	SoftAP, WiFi (ac), ScreenShare (Miracst), SmartShare, DIAL, Bluetooth Sound Sync, LG Sound Sync			
HOSPITALITY FEATURES		Hotel Mode, Lock Mode, Welcome Screen, Insert Image, External Speaker Out, Instant ON, One Channel Map, External Clock Ready (Except 24"/28"), External Power, RJP Compatibility, RTC (Real Time Clock), webRTC Ready			
GENERAL FEATURES	Installation	EzManager, USB Cloning			
	Management	Wake on RF, WOL, Remote Diagnostics, TVLink Interactive, IR Out, Multi IR Code, HTNG/HDMI-CEC			
	Setting Option	Auto Off/Sleep Timer, Smart Energy Saving, Motion Eye care			
	Anti-theft System	Kensington Lock, Credenza/Security Screw Hole, Lock Down Plate			
INTERFACE	Side	HDMI IN, USB(2), CI Slot			
	Rear	RF In (2), AV In, Video Component In (RCA5), Digital Audio Out (Optical), HDMI Input, RS-232C, Headphone Out, Clock Interface, RJ45 (2), External Speaker Out (2)			
DIMENSION (Unit :mm)	Vesa	200 x 200		300 x 300	
	W x H x D / weight (with stand)	739 x 495 x 241 / 6.1kg	974 x 625 x 303 / 12.5kg	1,107 x 702 x 303 / 14.6kg	1,241 x 770 x 303 / 19.7kg
	W x H x D / weight (packing)	905 x 530 x 162 / 7.4kg	1,147 x 660 x 175 / 14.6kg	1,296 x 770 x 171 / 17.8kg	1,360 x 860 x 190 / 24.4kg
POWER (Unit : Watts)	Voltage, Hz	100~240V, 50 / 60 Hz			
	Max	60.5	96.7	106.0	126.0
	Typical	48.0	73.8	83.0	105.0
	Energy saving (Min)	44.0	66.3	72.0	90.0
	Energy saving (Med)	31.4	45.0	49.0	60.0
	Energy saving (Max)	20.4	28.0	31.0	40.0
	Stand-by	0.3			
ECO	ErP Class	A	A	A	A+
	On Power Consumption (W)	40	66	77	86
	Luminance Ratio (%)	65			
	Mercury Content (mg)	0			
	Presence of Lead	Yes			
	Average Annual Consumption (kWh)	58	96	112	126
STANDARD APPROVAL	Safety	CB, CU TR			
	Environment	CE			
	Etc.	RoHS, ErP			
EAN		8806084570390	8806084673046	8806084675125	8806084659187

Connessioni

55LV761H
49LV761H
43LV761H
32LV761H

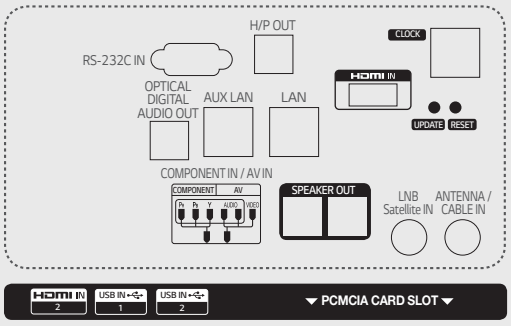

*I dati presenti in questa scheda tecnica sono soggetti a modifiche dovute ad aggiornamenti di prodotto. Vi invitiamo a consultare i manuali d'uso o il sito **www.lg.com/it** per verificare la congruità dei dati

LV761H | Disegno Tecnico

32"

739 x 495 x 241 /

6.1

*Swivel

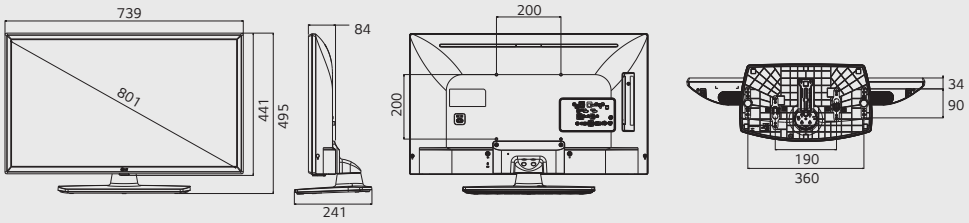

43"

974 x 625 x 303 /

12.5

*Swivel

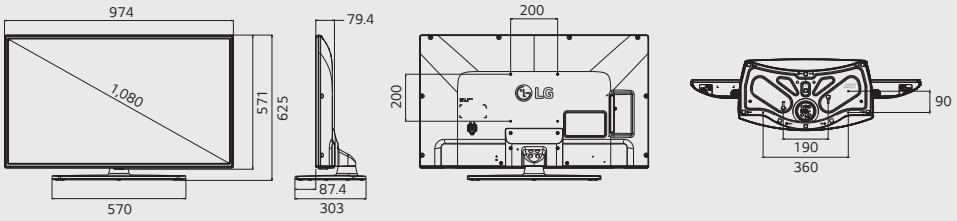

49"

1,107 x 702 x 303 /

14.6

*Swivel

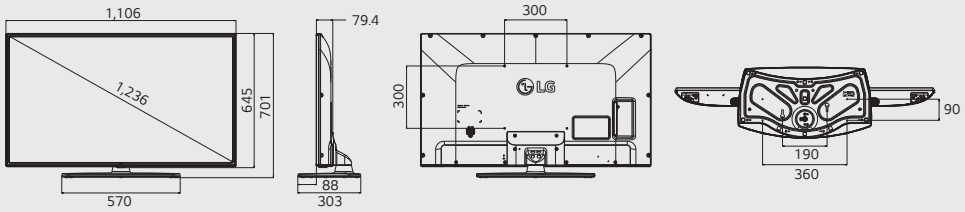

55"

1,241 x 770 x 303 /

19.5

*Swivel

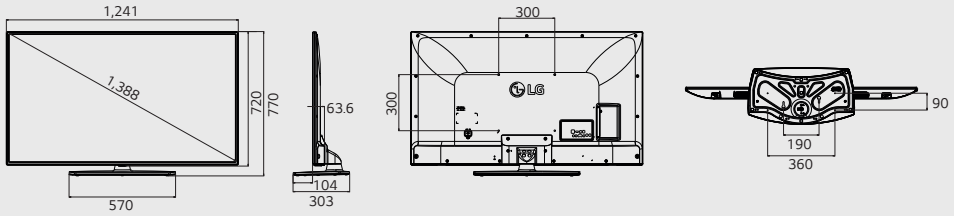

LV761H | Scheda Tecnica

LG Business Solutions

		24	28
DISPLAY	Type	Edge LED	
	Resolution	1,366 x 768 (HD)	
	Brightness	250cd/m²	300cd/m²
	Viewing Angle Degree	178° / 178°	
	Response Time	8	
BROADCASTING SYSTEM	Analog	PAL / SECAM	
	Digital	DVB-T2/C/S2	
VIDEO	Picture Engine	XD Engine	
	Real Cinema 24p (3:3 Pull down)	•	
	Aspect Ratio	• 6 modes (16:9, Original, Full wide, 4:3, Vertical Zoom, All-Direction Zoom)	
AUDIO	Audio Output / Speaker System	5W + 5W / 2.0ch	
	Sound Mode	• 6 modes (Standard, Cinema, Clear Voice III, Sports, Music, Game)	
	Clear Voice	• (Clear Voice III)	
SOLUTION	Type	Pro:Centric® Smart, V, Direct, Quick Menu (TV Embedded Home UI)	
	Data Streaming (IP &RF)	•	
	RF	• (1 Tuner)	
	HCAP (SDK)	GEM / Flash /HTML5	
	Pro:Centric Application	PCA 3.7	
	Digital Right Management	Pro:Idiom	
SMART FEATURES	Smart UX	webOS 3.5, Commercial Smart Home, Web Browser, Pre-loaded Apps, SDP(Service Delivery Platform) compatibility, Magic Remote Ready	
	Connectivity	SoftAP, WiFi (ac), ScreenShare (Miracst), SmartShare, DIAL, Bluetooth Sound Sync, LG Sound Sync	
HOSPITALITY FEATURES		Hotel Mode, Lock Mode, Welcome Screen, Insert Image, External Speaker Out, Instant ON, One Channel Map, External Clock Ready (Except 24"/28"), External Power, RJP Compatibility, RTC (Real Time Clock), webRTC Ready	
GENERAL FEATURES	Installation	EzManager, USB Cloning	
	Management	Wake on RF, WOL, Remote Diagnostics, TVLink Interactive, IR Out, Multi IR Code, HTNG/HDMI-CEC	
	Setting Option	Auto Off/Sleep Timer, Smart Energy Saving, Motion Eye care	
	Anti-theft System	Kensington Lock, Credenza/Security Screw Hole, Lock Down Plate	
INTERFACE	Side	Headphone Out, HDMI In, USB, CI slot	
	Rear	RF In (2), AV In, Video Component In (RCA5), Digital Audio Out (Optical), HDMI Input, USB, RS-232C, RJ45, External Speaker Out (2)	
DIMENSION (Unit :mm)	Vesa	75 x 75	100 x 100
	W x H x D / weight (with stand)	556 x 384.3 x 140.6 / 3.7 kg	641.5 x 429.5 x 175 / 4.9 kg
	W x H x D / weight (packing)	700 x 140 x 402 / 4.9 kg	724 x 470 x 152 / 6.1 kg
POWER (Unit : Watts)	Voltage, Hz	100~240V, 50 / 60 Hz	
	Max	TBD	TBD
	Typical	TBD	TBD
	Energy saving (Min)	TBD	TBD
	Energy saving (Med)	TBD	TBD
	Energy saving (Max)	TBD	TBD
	Stand-by	0.3	
ECO	ErP Class	TBD	TBD
	On Power Consumption (W)	TBD	TBD
	Luminance Ratio (%)	65	
	Mercury Content (mg)	0	
	Presence of Lead	Yes	
	Average Annual Consumption (kWh)	TBD	TBD
STANDARD APPROVAL	Safety	CB, CU TR	
	Environment	CE	
	Etc.	RoHS, ErP	
EAN		TBD	8806087825435

Connessioni

28LV761H / 24LV761H

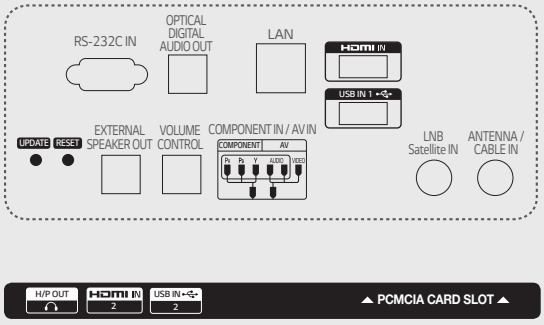

*I dati presenti in questa scheda tecnica sono soggetti a modifiche dovute ad aggiornamenti di prodotto. Vi invitiamo a consultare i manuali d'uso o il sito **www.lg.com/it** per verificare la congruità dei dati

LV761H | Disegno Tecnico

24"

556.0 x 384.3 x 140.6 /
3.7

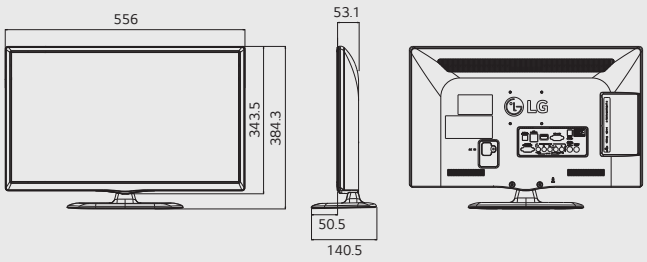

28"

641.5 x 429.5 x 175 /
4.9

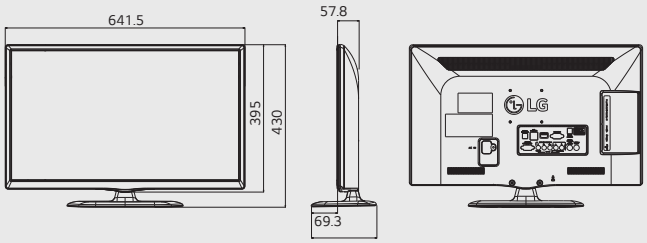

LX761H | Scheda Tecnica

LG Business Solutions

				55”	49”	43”
DISPLAY	Type			Edge LED	Edge LED	Edge LED
	Resolution			1920 x 1080 (FHD)		
BROADCASTING SYSTEM	Analog			PAL/SECAM		
	Digital			DVB-T2/C/S2		
AUDIO	Audio Output			10W + 10W		
BASIC COMMERCIAL TV FEATURES				Welcome Screen, Lock Mode, One Channel Map, Multi-IR Code, Hotel Mode, Instant ON, USB Cloning, IR Out, TV Link Interactive , External Power, External Clock(Ready), External Speaker Out		
GENERAL FEATURES	Pro:Centric®		Type	Pro:Centric SMART		
			Data Streaming (IP & RF)	●		
			Pro:Centric Application	PCA 3.5 / 3.0 / 2.0 / 1.5		
			RF(1/2 Tuner)	1 Tuner		
			HCAP(GEM/FLASH/HTML)	GEM / Flash / HTML5		
	Connectivity			DLNA, WiDi, Miracast, WiFi Direct, DIAL		
	Management			Remote Diagnostics/EzManager		
	Interactivity			HTNG/HDMI-CEC		
	Usability			Built-In WiFi , Soft AP		
	DRM			Pro:Idiom		
	RJP Interface			RS232C, HDMI CEC		
	Auto Off/ Auto Saving			●		
	Smart Energy Saving			●		
	Anti-theft System			Kensington Lock, Credenza/Security Screw Hole, Lock Down Plate, 1 Pole Stand		
INTERFACE	Side		Headphone Out	1		
			HDMI In	1		
			USB (2.0)	2 (2.0)		
			CI Slot	1		
	Rear		RF In	2		
			Full Scart	1		
			Digital Audio Out (Coaxial / Optical)	1 (Optical)		
			HDMI/HDCP Input	1		
			RS-232C(D-Sub 9pin)	1		
			Clock Interface	1		
			LAN Port	2		
			External Speaker Out(3.5mm phone jack)	2 (Spk-out 1, Vol. Control 1)		
DIMENSION (Unit: mm)	Vesa			300 X 300	300 X 300	200 X 200
	Set Size W x H x D (with stand, mm)			1242 x 780 x 325	1106 x 701 x 325	973 x 624 x 325
	Set Weight(With Stand, Set, kg)			21.1	17.8	14.6
POWER	Voltage, Hz			100 ~ 240V, 50/60Hz		
	Max (Watts)			123.1W	108.4W	107.3W
	Typical (Watts)			100.1W	85.2W	84.2W
	Energy saving (Min)			50W	44W	43W
	Energy saving (Med)			31W	28W	27W
	Energy saving (Max)			21W	19W	18W
	Stand-by(Watts)			0.3W		
STANDARD APPROVAL	Safety			CB , CU TR		
	Environment			CE		
	Etc.			ROHS, ErP, Eco flower		
	Eco	ErP Class		TBD		
			On Power Consumption (IEC62087 Edition 2)(W)	64	55	53
			Stand-by (Watts)	0.3		
			Average Annual Consumption(kWh)	93	80	77
EAN				8806087862300	8806087862201	8806087862133

Connessioni

55LX761H
49LX761H
43LX761H

HDMI HIGH-DEFINITION MULTIMEDIA INTERFACE

1. AUX LAN
2. LAN
3. SPEAKER OUT_VOLUME CONTROL
4. SPEAKER OUT_STEREO (8Ω)
5. OPTICAL DIGITAL AUDIO OUT
6. HDMI IN 1 (ARC)
7. CLOCK
8. RS 232C IN (CONTROL & SERVICE)
9. AV IN/OUT
10. LNB Satellite IN
11. ANTENA/CABLE IN
12. H/P OUT
13. HDMI IN 2
14. USB IN 1
15. USB IN 2
16. PCMCIA CARD SLOT

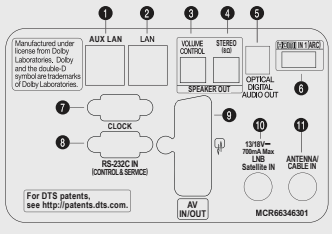

*I dati presenti in questa scheda tecnica sono soggetti a modifiche dovute ad aggiornamenti di prodotto. Vi invitiamo a consultare i manuali d'uso o il sito **www.lg.com/it** per verificare la congruità dei dati

LV661H | Scheda Tecnica

LG Business Solutions

		43	49
DISPLAY	Type	Direct LED	
	Resolution	1,920 x 1,080 (FHD)	
	Brightness	400cd/m²	
	Viewing Angle Degree	178° / 178°	
	Response Time	6	
BROADCASTING SYSTEM	Analog	PAL / SECAM	
	Digital	DVB-T2/C/S2	
VIDEO	Picture Engine	XD Engine	
	Real Cinema 24p (3:3 Pull down)	•	
	Aspect Ratio	• 6 modes (16:9, Original, 4:3, Vertical Zoom, All-Direction Zoom, Just Scan)	
AUDIO	Audio Output / Speaker System	10W + 10W / 2.0 ch	
	Sound Mode	• 6 modes (Standard, Cinema, Clear Voice III, Sports, Music, Game)	
	Clear Voice	• (Clear Voice III)	
SOLUTION	Type	Pro:Centric® Smart, V, Direct	
	Data Streaming (IP &RF)	•	
	RF	• (1 Tuner)	
	HCAP (SDK)	GEM / Flash /HTML5	
	Pro:Centric Application	PCA 3.7	
	Digital Right Management	Pro:Idiom	
SMART FEATURES	Smart UX	webOS 3.5, Commercial Smart Home, Web Browser, Pre-loaded Apps, SDP (Service Delivery Platform) compatibility, Magic Remote Ready	
	Connectivity	SoftAP, WiFi (ac), ScreenShare (Miracast), SmartShare, DIAL, Bluetooth Sound Sync, LG Sound Sync	
HOSPITALITY FEATURES		Hotel Mode, Lock Mode, Welcome Screen, Insert Image, External Speaker Out, Instant ON, One Channel Map, RJP Compatibility	
GENERAL FEATURES	Installation	EzManager, USB Cloning	
	Management	Wake on RF, WOL, SNMP, Remote Diagnostics, TVLink Interactive, IR Out, Multi IR Code, HTNG/HDMI-CEC	
	Setting Option	Auto Off/Sleep Timer, Smart Energy Saving, Motion Eye care	
	Anti-theft System	Kensington Lock, Credenza/Security Screw Hole, Lock Down Plate	
INTERFACE	Side	HDMI IN, USB (2), CI Slot	
	Rear	RF In (2), AV In, Video Component In (Phone Jack Type), HDMI Input, RS-232C, Headphone Out, RJ45, External Speaker Out (2)	
DIMENSION (Unit :mm)	Vesa	200 x 200	300 x 300
	W x H x D / weight (with stand)	977 x 630 x 303 / 8.0kg	1,110 x 705 x 303 / 14.5kg
	W x H x D / weight (packing)	1,147 x 660 x 175 / 13.9kg	1,296 x 770 x 171 / 17.2kg
POWER (Unit : Watts)	Voltage, Hz	100 ~ 240V, 50/60Hz	
	Max	100.2	113.6
	Typical	66.2	88.7
	Energy Saving (Min)	51	58.7
	Energy Saving (Med)	37.5	42.3
	Energy Saving (Max)	22.3	22.9
	Stand-by	0.3	
ECO	ErP Class	A	
	On Power Consumption (W)	68	77
	Luminance Ratio (%)	65	
	Mercury Content (mg)	0	
	Presence of Lead	Yes	
	Average Annual Consumption (kWh)	99	112
STANDARD APPROVAL	Safety	CB, CU TR	
	Environment	CE	
	Etc.	RoHS, ErP	
EAN		8806098053216	8806098053223

Connessioni

49LV661H / 43LV661H

HDMI HIGH-DEFINITION MULTIMEDIA INTERFACE

1. RS-232C IN
2. H/P OUT
3. HDMI IN 1
4. COMPONENT IN / AV IN
5. LAN
6. SPEAKER OUT
7. LNB Satellite IN
8. ANTENNA / CABLE IN
9. HDMI IN 2
10. USB IN 1
11. USB IN 2

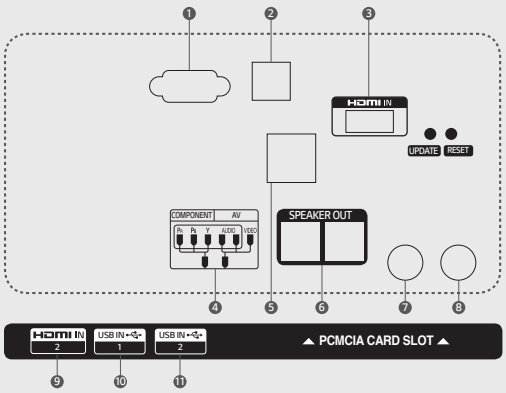

*I dati presenti in questa scheda tecnica sono soggetti a modifiche dovute ad aggiornamenti di prodotto. Vi invitiamo a consultare i manuali d'uso o il sito **www.lg.com/it** per verificare la congruità dei dati

LV661H | Disegno Tecnico

43"

977 x 630 x 303 /
8.0

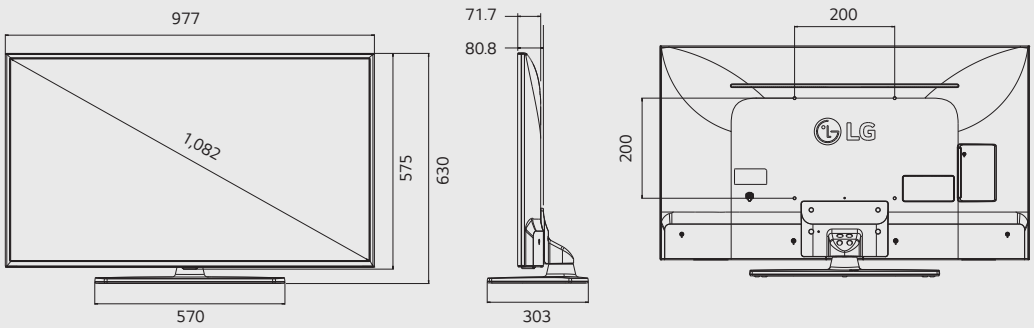

49"

1,110 x 705 x 303 /
14.5

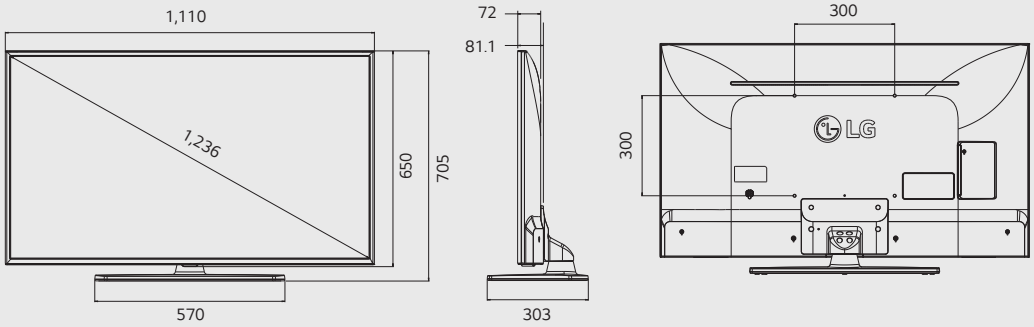

LV541H | Scheda Tecnica

LG Business Solutions

		32	43	49	55
DISPLAY	Type	Direct LED			Edge LED
	Resolution	1,920 x 1,080 (FHD)			
	Brightness	240cd/m²	400cd/m²		
	Viewing Angle Degree	178° / 178°			
	Response Time	9			
BROADCASTING SYSTEM	Analog	PAL/SECAM			
	Digital	DVB-T2/C/S2			
VIDEO	Picture Engine	Triple XD Engine			
	Real Cinema 24p (3:3 Pull down)	•			
	Aspect Ratio	• 6 modes (16:9, Original, 4:3, Vertical Zoom, All-Direction Zoom, Full wide)			
AUDIO	Audio Output / Speaker System	5W + 5W / 2.0 ch	10W + 10W / 2.0 ch		
	Sound Mode	• 6 modes (Standard, Cinema, Clear Voice, Sports, Music, Game)			
	Clear Voice	•			
SOLUTION	Type	Pro:Centric V, Quick Menu (TV Embedded Home UI)			
	Data Streaming (IP &RF)	• (RF Only)			
	RF	• (1 Tuner)			
	HCAP (SDK)	GEM / Flash			
	Pro:Centric Application	PCA 3.7			
HOSPITALITY FEATURES		Hotel Mode, Lock Mode, Welcome Screen/Video, Insert Image, One Channel Map, External Speaker Out, Instant ON, External Power, RJP Compatibility, External Clock, USB Auto Playback, Time Scheduler			
GENERAL FEATURES	Installation	Ez Manager, USB Cloning			
	Management	Wake on RF, Self Diagnostics, TVLink Interactive, IR Out, Multi IR Code, HTNG/HDMI-CEC			
	Setting Option	Auto Off/Sleep Timer, Smart Energy Saving, Motion Eye care			
	Anti-theft System	Kensington Lock, Credenza/Security Screw Hole, Lock Down Plate			
INTERFACE	Side	HDMI In (2), USB , CI Slot			
	Rear	RF(2), AV In, Component In (RCA5), Digital Optical Audio Out, HDMI Input, RS-232C, Headphone Out, Clock Interface, External Speaker Out (2), RJ45 (SNMP)			
DIMENSION (Unit : mm)	Vesa	200 x 200		300 x 300	
	WxHxD / weight (with stand)	739 x 495 x 241 / 6.1kg	974 x 625 x 303 / 12.5kg	1,107 x 720 x 303 / 14.6kg	1,241 x 770 x 303 / 19.7kg
	WxHxD / weight (Packing)	905 x 530 x 162 / 7.4kg	1,147 x 660 x 175 / 14.6kg	1,296 x 770 x 171 / 17.8kg	1,360 x 890 x 190 / 24.4kg
POWER (Unit : Watts)	Voltage, HZ	100-240V, 50/60Hz			
	Max	60.5	88.7	98.1	119.8
	Typical	40.7	62.7	74.2	95.2
	Stand-by	0.3			
	Energy Saving (Min)	35.2	50.2	59.4	76.2
	Energy Saving (Med)	25.7	34.5	40.8	52.4
	Energy Saving (Max)	15.3	18.8	22.3	28.6
ECO	ErP Class	A+			
	On Power Consumption (Watts)	30	53	64	78
	Luminance Ratio (%)	65			
	Mercury Content (mg)	0			
	Presence of Lead	Yes			
	Average Annual Consumption (kWh)	42	74	89	108
STANDARD APPROVAL	Safety	CB, CU TR			
	Environment	CE			
	ETC	RoHS, Erp			
EAN		8806084566256	8806084618283	8806084617835	8806084611918

Connessioni

55LV541H / 49LV541H / 43LV541H / 32LV541H

1. H/P OUT
2. OPTICAL DIGITAL AUDIO OUT
3. LAN
4. HDMI IN 1
5. EXTERNAL SPEAKER OUT
6. VOLUME CONTROL
7. CLOCK
8. RS-232C IN
9. COMPONENT IN / AV IN
10. LNB Satellite IN
11. ANTENNA/CABLE IN
12. HDMI IN 2
13. HDMI IN 3
14. USB IN

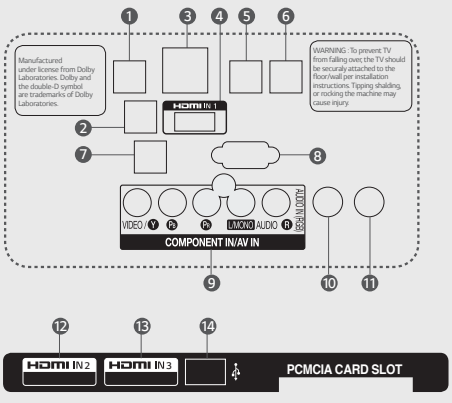

*I dati presenti in questa scheda tecnica sono soggetti a modifiche dovute ad aggiornamenti di prodotto. Vi invitiamo a consultare i manuali d'uso o il sito **www.lg.com/it** per verificare la congruità dei dati

LV541H | Disegno Tecnico

32"

739 x 495 x 241 /

4.85

*Swivel

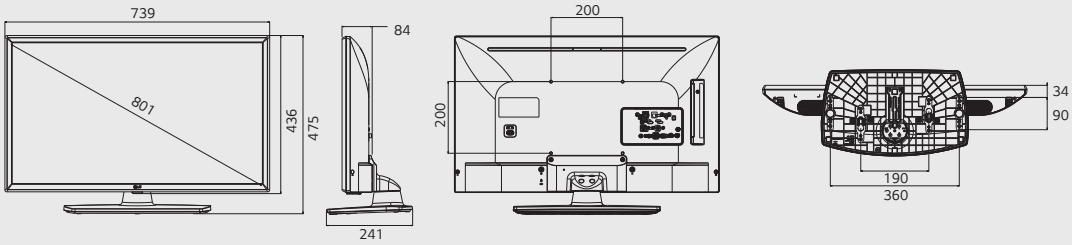

43"

974 x 625 x 303 /

12.5

*Swivel

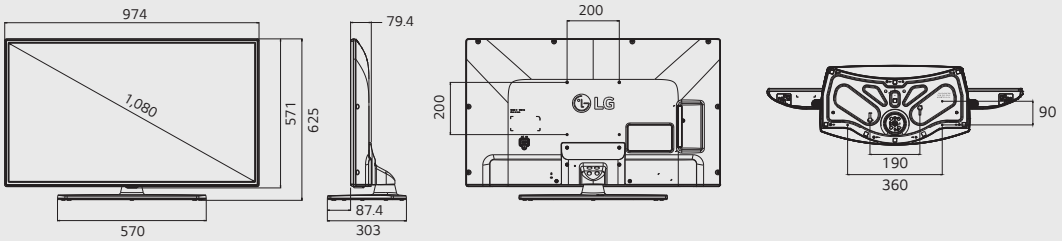

49"

1,107 x 702 x 303 /

14.6

*Swivel

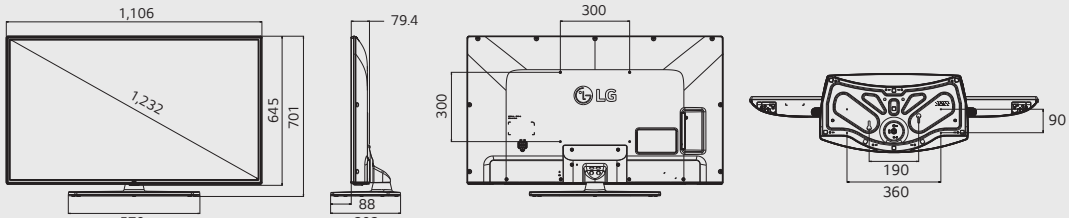

55"

1,241 x 770 x 303 /

19.5

*Swivel

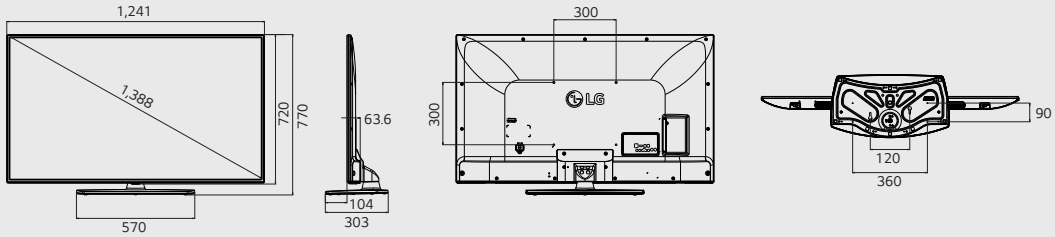

LV341H | Scheda Tecnica

LG Business Solutions

		32	43	49	55
DISPLAY	Type	Direct LED			Edge LED
	Resolution	1,920 x 1,080 (FHD)			
	Brightness	240cd/m²	400cd/m²		
	Viewing Angle Degree	178° / 178°			
	Response Time	9			
BROADCASTING SYSTEM	Analog	PAL/SECAM			
	Digital	DVB-T2/C/S2			
VIDEO	Picture Engine	XD Engine			
	Real Cinema 24p (3:3 Pull down)	•			
	Aspect Ratio	• 6 modes (16:9, Original, 4:3, Vertical Zoom, All-Direction Zoom, Full wide)			
AUDIO	Audio Output / Speaker System	5W + 5W / 2.0 ch	10W + 10W / 2.0 ch		
	Sound Mode	• 6 modes (Standard, Cinema, Clear Voice, Sports, Music, Game)			
	Clear Voice	•			
SOLUTION	Type	Pro:Centric V, Quick Menu (TV Embedded Home UI)			
	Data Streaming (IP &RF)	• (RF Only)			
	RF	• (1 Tuner)			
	HCAP (SDK)	GEM / Flash			
	Pro:Centric Application	PCA 3.7			
HOSPITALITY FEATURES		Hotel Mode, Lock Mode, Welcome Screen/Video, Insert Image, One Channel Map, External Speaker Out, RJP Compatibility, USB Auto Playback, Time Scheduler			
GENERAL FEATURES	Installation	Ez Manager, USB Cloning			
	Management	Wake on RF, Self Diagnostics, IR Out, Multi IR Code, HTNG/HDMI-CEC			
	Setting Option	Auto Off/Sleep Timer, Smart Energy Saving, Motion Eye Care			
	Anti-theft System	Kensington Lock, Credenza/Security Screw Hole, Lock Down Plate			
INTERFACE	Side	Headphone Out, HDMI In, USB , CI Slot			
	Rear	RF(2), AV In, Component In (RCA5), Digital Optical Audio Out, HDMI Input, RS-232C, RGB In, PC Audio Input, External Speaker Out, RJ45 (SNMP)			
DIMENSION (Unit : mm)	Vesa	200 x 200		300 x 300	
	W x H x D / weight (with stand)	739 x 495 x 241 / 6.1kg	974 x 625 x 303 / 12.5kg	1,107 x 702 x 303 / 14.6kg	1,241 x 770 x 303 / 19.7kg
	W x H x D / weight (Packing)	905 x 530 x 162 / 7.4kg	1,147 x 660 x 175 / 14.6kg	1,296 x 770 x 171 / 17.8kg	1,360 x 890 x 190 / 24.4kg
POWER (Unit : Watts)	Voltage, Hz	100-240V, 50/60Hz			
	Max	60.5	88.7	98.1	119.8
	Typical	40.7	62.7	74.2	95.2
	Energy Saving (Min)	35.2	50.2	59.4	76.2
	Energy Saving (Med)	25.7	34.5	40.8	52.4
	Energy Saving (Max)	15.3	18.8	22.3	28.6
	Stand-by	0.3			
ECO	ErP Class	A+			
	On Power Consumption (Watts)	30	53	64	78
	Luminance Ratio (%)	65			
	Mercury Content (mg)	0			
	Presence of Lead	Yes			
	Average Annual Consumption (kWh)	42	74	89	108
STANDARD APPROVAL	Safety	CB, CU TR			
	Environment	CE			
	ETC	RoHS, ErP			
EAN		8806084565723	8806084608093	8806084609557	8806084609526

Connessioni

55LV341H / 49LV341H / 43LV341H / 32LV341H

HDMI HIGH-DEFINITION MULTIMEDIA INTERFACE

1. OPTICAL DIGITAL AUDIO OUT
2. LAN (MHEG/SERVICE)
3. HDMI IN 1
4. EXTERNAL SPEAKER OUT
5. RGB IN
6. RS-232C IN
7. COMPONENT IN / AV IN
8. LNB Satellite IN
9. ANTENNA/CABLE IN
10. H/P OUT
11. HDMI IN 2
12. USB IN

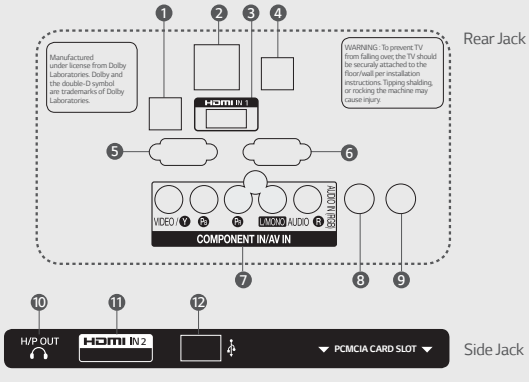

Rear Jack

Side Jack

*I dati presenti in questa scheda tecnica sono soggetti a modifiche dovute ad aggiornamenti di prodotto. Vi invitiamo a consultare i manuali d'uso o il sito **www.lg.com/it** per verificare la congruità dei dati

LV341H | Disegno Tecnico

32"

739 x 495 x 241 /

6.1

*Swivel

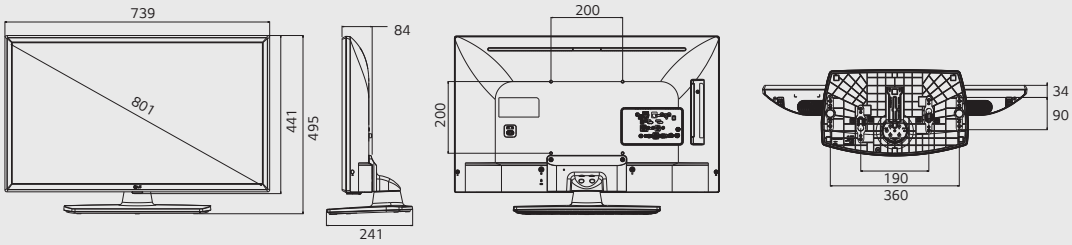

43"

974 x 625 x 303 /

12.5

*Swivel

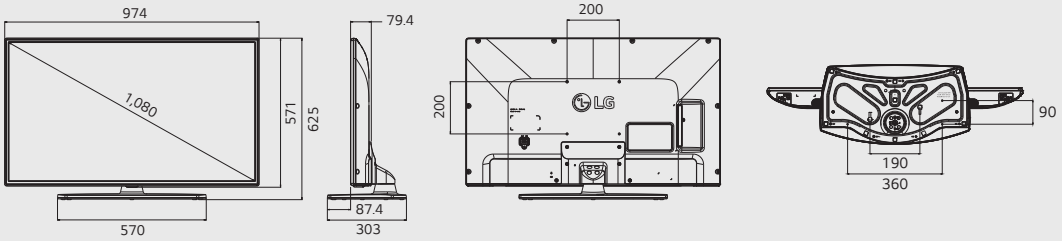

49"

1,107 x 702 x 303 /

14.6

*Swivel

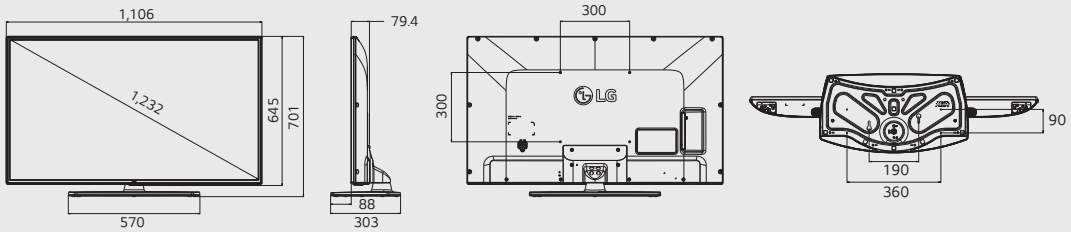

55"

1,241 x 770 x 303 /

19.7

*Swivel

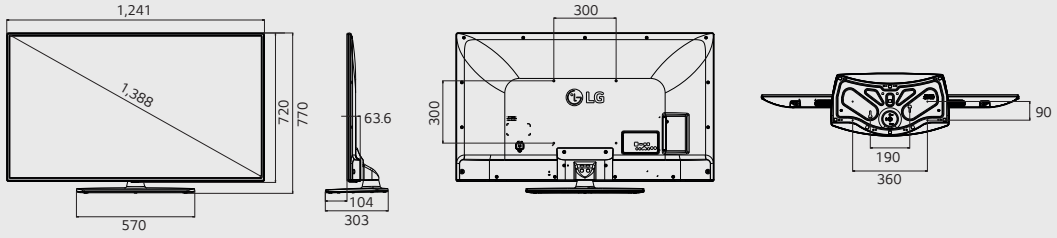

SCHEDE E DISEGNI TECNICI
2018

LG Business Solutions

SET TOP BOX
ULTRA HD

STB-5500

STB-5500 | Scheda Tecnica

BROADCASTING SYSTEM	Analog		PAL / SECAM
	Digital		DVB-T2/C/S2
VIDEO	XD Engine		•
	Real Cinema 24p (3:3 Pull down)		•
	Output Resolution		HD (1,280x720) / 1,366 x 768 / FHD (1,920 x 1,080) / UHD (3,840 x 2,160)
AUDIO	Optical Sound Sync		• (SPDIF)
GENERAL FEATURES	Pro:Centric®	Type	Smart
		Data Streaming (IP&RF)	•
		Pro:Centric Application	PCA 3.7
		Tuner	1 Tuner
		HCAP (SDK)	GEM / Flash / HTML5
	Smart Features		Commercial Smart Home, Web Browser, softAP, Magic Remote (Ready)
	Connectivity		Smart Share, Screen Share, Bluetooth Sound Sync
	DRM (Digital Right Management)		Pro:Idiom
	Management		Remote Diagnostics, EzManager (for initial configuration)
	Interactivity		HTNG / HDMI-CEC
	RJP Interface		RS232C, HDMI
	Advanced Setting Option		Auto Off / Auto Sleep, Motion Eye Care, Smart Energy Saving
HOSPITALITY FEATURES			Hotel Mode, Lock Mode, IR Out, USB Cloning, One Channel Map, Multi IR Code, Welcome Screen, Instant On, TV Link Interactive, SNMP, webRTC Ready
INTERFACE	Upper Side		HDMI (2), USB (2)
	Lower Side		Power, RF In (2), Display Control (4 Pin Phone Jack), External IR, AV In, Service, Digital Optical Out, LAN Port, HDMI Out
ACCESSORY			Adapter, Cable (HDMI, RS-232C to Phone cable, AV gender), Simple Book
DIMENSION (Unit :mm)	W x H x D / weight (set)		233 x 29.8 x 180.5 / 0.76kg
	W x H x D / weight (Packing)		366 x 218 x 143 / 1.89kg
POWER (Unit : Watts)	Voltage, Hz		100~240V, 50 / 60 Hz
	Typical		5.3
	Stand-by		0.3 ↓
STANDARD APPROVAL	Safety		CB
	Environment		CE
	Etc.		ROHS
EAN			8806087168037

Connessioni

STB-5500

❶ POWER
❷ HDMI OUT
❸ OPTICAL DIGITAL AUDIO OUT
❹ SERVICE
❺ AV IN
❻ IR IN
❼ DISPLAY CONTROL
❽ LNB Satellite IN
❾ ANTENNA / CABLE IN
❿ LAN
⓫ HDMI IN 1
⓬ HDMI IN 2
⓭ USB IN 1, USB IN 2

Front

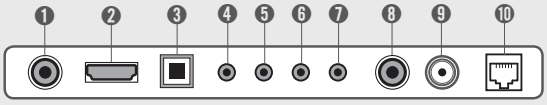

Rear

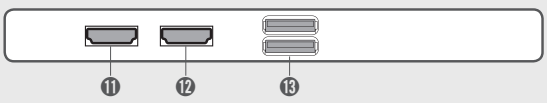

*I dati presenti in questa scheda tecnica sono soggetti a modifiche dovute ad aggiornamenti di prodotto. Vi invitiamo a consultare i manuali d'uso o il sito **www.lg.com/it** per verificare la congruità dei dati

STB-5500 | Disegno Tecnico

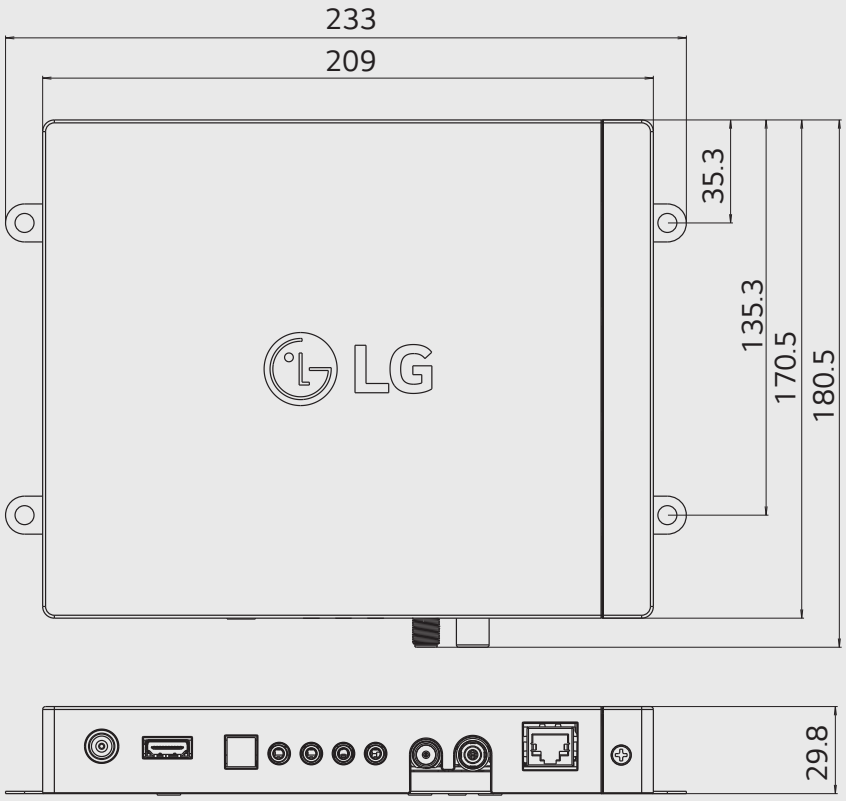

SCHEDE E DISEGNI TECNICI
2018

LG Business Solutions

COMMERCIAL LITE
ULTRA HD

UV341C
75” | 65”

UV341C | Scheda Tecnica

LG Business Solutions

		65	75
DISPLAY	Type	Edge LED	
	Resolution	3,840 x 2,160 (UHD)	
	Brightness	330cd/m²	400cd/m²
	Viewing Angle Degree	178° / 178°	
	Response Time	8	
BROADCASTING SYSTEM	Analog	PAL/SECAM	
	Digital	DVB-T2/C/S2	
VIDEO	Triple XD Engine	•	
	Real Cinema 24p (3:3 Pull down)	•	
	Aspect Ratio	• 6 modes (16:9, Original, 4:3, Vertical Zoom, All-Direction Zoom, Just Scan)	
AUDIO	Audio Output / Speaker System	10W + 10W / 2.0 ch	
	Sound Mode	• 6 modes (Standard, Cinema, Clear Voice III, Sports, Music, Game)	
	Clear Voice	•	
SMART FEATURES	Smarrt UX	webOS 3.0, Commercial Smart Home, Web Browser, YouTube App	
	Connectivity	SoftAP, WiFi (ac), ScreenShare (Miracst), SmartShare, DIAL, Bluetooth Sound Sync, LG Sound Sync	
HOSPITALITY FEATURES		Hotel Mode, Lock Mode, Welcome Screen, Insert Image, One Channel Map, RJP Compatibility, USB Auto Playback+, Crestron Connected® Certified, DPM (Display Power Management) mode	
GENERAL FEATURES	Installation	USB Cloning	
	Management	WOL, SNMP, Self Diagnostics, TVLink Tuner, IR Out, Multi IR Code, HTNG/HDMI-CEC	
	Setting Option	Auto Off/Sleep Timer, Smart Energy Saving, Motion Eye care	
	Anti-theft System	Kensington Lock	
INTERFACE	Side	HDMI In (2), USB 2.0, CI Slot	
	Rear	RF In (2), Digital Audio Out (Optical), HDMI Input, RS-232C, Headphone Out, RJ45, Debug (Phone Jack Type)	
ACCESSORY		S-Con, Power Cord, Simple Manual, Magic Remote (Optional)	
DIMENSION (Unit : mm)	Vesa	300 x 300	600 x 400
	W x H x D / weight (with stand)	1,345 x 835 x 335.9 / 22.8kg	1,573 x 973 x 367.5 / 35.5kg
	W x H x D / weight (Carton)	1,492 x 880 x 190 / 29.3kg	1,714 x 1,104 x 190 / 43.8kg
POWER (Unit : Watts)	Voltage, Hz	100-240V, 50/60Hz	
	Max	161.9	215.8
	Typical	135.2	189.9
	Energy Saving (Min)	108.2	151.9
	Energy Saving (Med)	74.4	104.4
	Energy Saving (Max)	40.6	57.0
	Stand-by	0.3	
Eco	ErP Class	A++	A+
	On Power Consumption (Watts)	82	128
	Luminance Ratio (%)	65	
	Mercury Content (mg)	0	
	Presence of Lead	Yes	
	Average Annual Consumption (kWh)	120	187
STANDARD APPROVAL	Safety	CB, CU TR	
	Environment	CE	
	ETC	RoHS, ErP	
EAN		8806084653314	8806084648426

Connessioni

75UV341C / 65UV341C

HDMI HIGH-DEFINITION MULTIMEDIA INTERFACE

1. RS-232C IN
2. LAN
3. OPTICAL DIGITAL AUDIO OUT
4. HDMI 1
5. SERVICE ONLY
6. H/P OUT
7. LNB Satellite IN
8. ANTENNA / CABLE IN
9. HDMI 2 / HDMI 3
10. USB IN 1

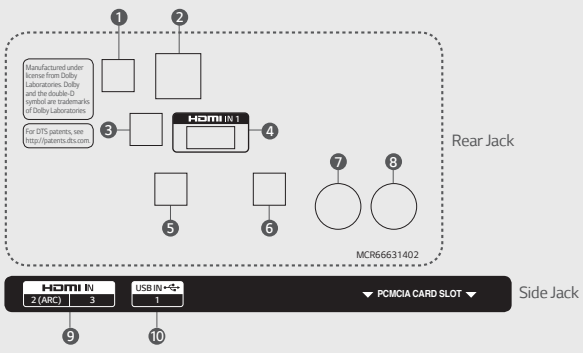

*I dati presenti in questa scheda tecnica sono soggetti a modifiche dovute ad aggiornamenti di prodotto. Vi invitiamo a consultare i manuali d'uso o il sito **www.lg.com/it** per verificare la congruità dei dati

75"/65”

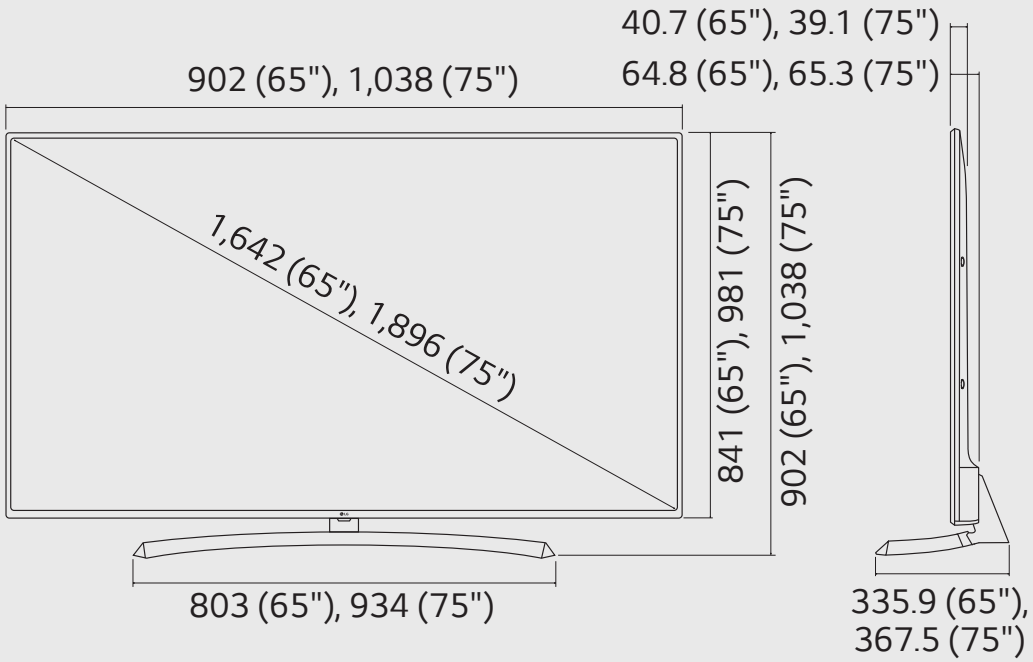
40.7 (65"), 39.1 (75")
64.8 (65"), 65.3 (75")
902 (65"), 1,038 (75")
1,642 (65"), 1,896 (75")
841 (65"), 981 (75")
902 (65"), 1,038 (75")
803 (65"), 934 (75")
335.9 (65"),
367.5 (75")

SCHEDE E DISEGNI TECNICI
2018

LG Business Solutions

COMMERCIAL LITE
FULL HD

LV340C
55” | 49” | 43” | 32”

LV300C
49” | 43” | 32”

LV340C | Scheda Tecnica

LG Business Solutions

		32	43	49	55
DISPLAY	Type	Direct LED			Edge LED
	Resolution	1,920 x 1,080 (FHD)			
	Brightness	240cd/m²	400cd/m²		
BROADCASTING SYSTEM	Analog	PAL / SECAM			
	Digital	DVB-T2/C/S2			
VIDEO	Triple XD Engine	•			
	Real Cinema 24p (3:3 Pull down)	•			
	Aspect Ratio	6 modes (16:9, Original, 4:3, Vertical Zoom, All-Direction Zoom, Just Scan)			
AUDIO	Audio Output / Speaker System	5W + 5W / 2.0 ch	10W + 10W / 2.0 ch		
	Sound Mode	• 6 modes (Standard, Cinema, Clear Voice III, Sports, Music, Game)			
	Clear Voice	• (Clear Voice III)			
GENERAL FEATURES	Installation	USB Cloning			
	Management	WOL (Wake on LAN), SNMP, Self Diagnostics, IR Out, Multi IR Code, HTNG/HDMI-CEC			
	Setting Option	Auto Off / Sleep Timer, Motion Eye Care, Smart Energy Saving			
	Anti-theft System	Kensington Lock			
HOSPITALITY FEATURES		Hotel Mode, Lock Mode, Welcome Screen/Video, Insert Image, One Channel Map, External Speaker Out, RJP Compatibility, USB Auto Playback+, Compatibility between Crestron® Certified devices, Time Scheduler			
INTERFACE	Side	Headphone Out, HDMI In, USB 2.0, CI Slot			
	Rear	RF In (2), AV In, Component In (Audio, RCA5), Digital Optical Audio Out, HDMI/HDCP Input, RGB In, PC Audio Input, RS-232C, RJ45 (SNMP), External Speaker Out			
CABINET (Unit : mm)	Vesa	200 x 200		300 x 300	
	W x H x D / weight (With Stand)	739 x 472 x 168 / 4.9kg	974 x 625 x 220 / 9.3kg	1,107 x 701 x 235 / 11.5kg	1,241 x 775 x 216 / 16.6kg
	W x H x D / weight (Packing)	812 x 510 x 142 / 6.1kg	1,060 x 660 x 152 / 11.3kg	1,193 x 770 x 158 / 13.5kg	1,360 x 835 x 152 / 21.3kg
POWER (Unit: Watts)	Voltage, Hz	100~240V, 50 / 60 Hz			
	Max	53.5	88.7	98.1	119.8
	Typical	37.7	62.7	74.2	95.2
	Energy saving (Min)	30.2	50.2	59.4	76.2
	Energy saving (Med)	20.7	34.5	40.8	52.4
	Energy saving (Max)	11.3	18.8	22.3	28.6
	Stand-by	0.3			
ECO	ErP Class	A+			
	On Power Consumption	30	53	64	78
	Luminance Ratio (%)	65			
	Mercury Content (mg)	0			
	Presence of Lead	Yes			
	Average Annual Consumption (kWh)	42	74	89	108
STANDARD APPROVAL	Safety	CB, CU TR			
	Environment	CE			
EAN		8806084609120	8806084608987	8806084608703	8806084608260

Connessioni

55LV340C / 49LV340C / 43LV340C / 32LV340C

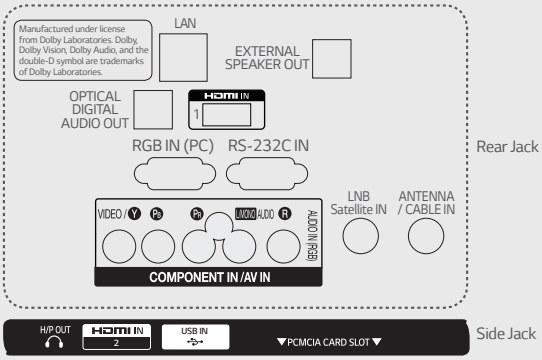

*I dati presenti in questa scheda tecnica sono soggetti a modifiche dovute ad aggiornamenti di prodotto. Vi invitiamo a consultare i manuali d'uso o il sito **www.lg.com/it** per verificare la congruità dei dati

LV340C | Disegno Tecnico

LG Business Solutions

32"

739 x 472 x 168

4.9

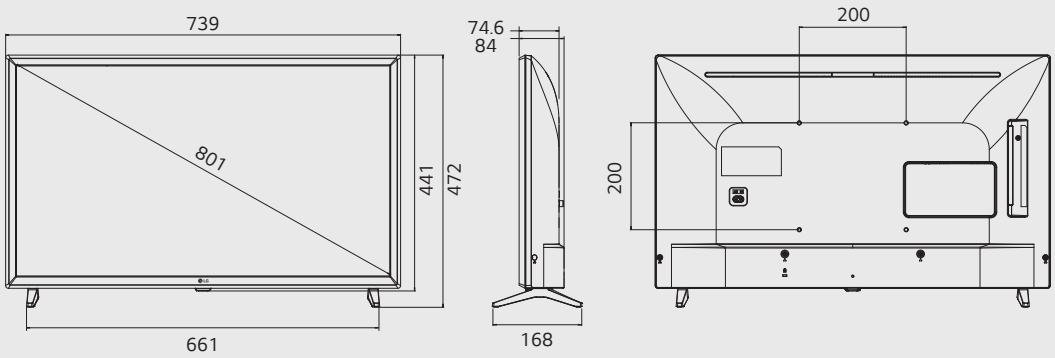

43"

974 x 625 x 221

9.3

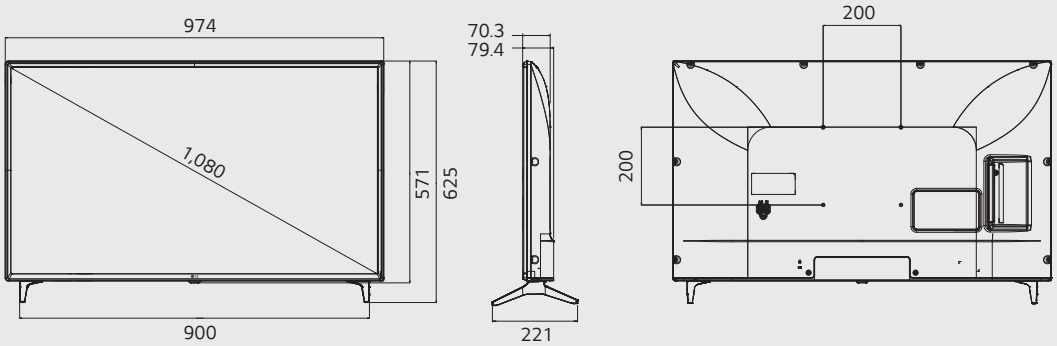

49"

1,106 x 701 x 235

11.4

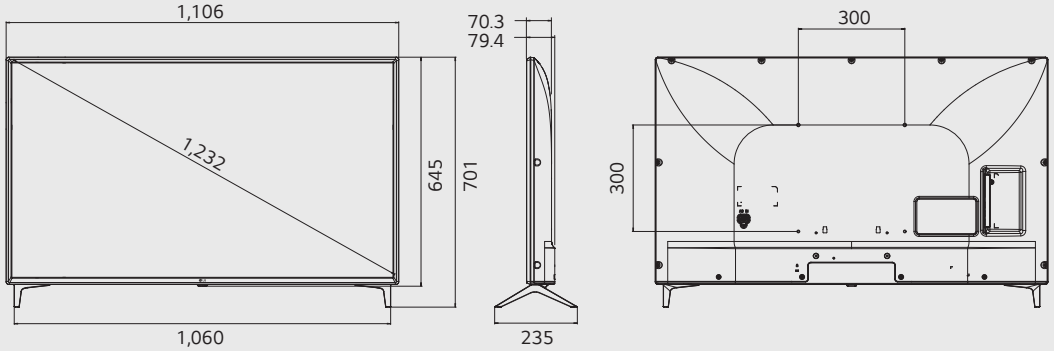

55"

1,240 x 775 x 216

16.6

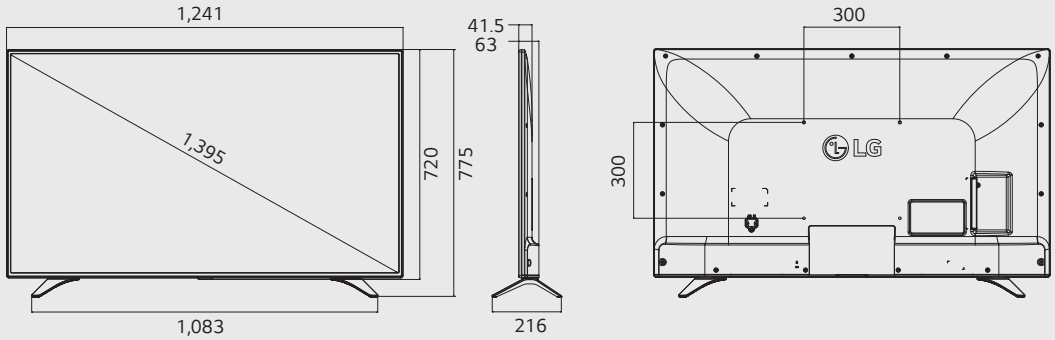

LV300C | Scheda Tecnica

LG Business Solutions

		32	43	49
DISPLAY	Type	Direct LED		
	Resolution	1,366 x 768 (HD)	1,920 x 1,080 (FHD)	
BROADCASTING SYSTEM	Analog	PAL/SECAM		
	Digital	DVB-T2/C/S2		
VIDEO	XD Engine	•		
	Real Cinema 24p (3:3 Pull down)	•		
	Aspect Ratio	6 modes (16:9, Original, 4:3, Vertical Zoom, All-Direction Zoom, Just Scan)		
AUDIO	Audio Output	5W + 5W		
	Speaker System	2.0 ch		
	Sound Mode	6 modes (Standard, Cinema, Clear Voice, Sports, Music, Game)		
	Clear Voice	•		
GENERAL FEATURES	Installation	USB Cloning		
	Management	Self Diagnostics (USB), Multi IR Code, IR Out, HTNG/HDMI-CEC		
	Setting Option	Auto Off/Sleep Timer, Motion Eye care		
HOSPITALITY FEATURES		Hotel Mode, Lock Mode, Welcome Screen/Video, Insert Image, One Channel Map, RJP Compatibility, USB Auto Playback+, Time Scheduler		
INTERFACE	Side	CI Slot		
	Rear	RF In (2), AV In (Share with Component), Component In + Video, HDMI In, USB 2.0, RS-232C, RJ45, Headphone Out		
CABINET (Unit : mm)	Vesa	100 x 100	200 x 200	300 x 300
	W x H x D / weight (with stand)	732 x 478 x 181.1 / 5.1kg	970 x 624 x 220.4 / 8.4kg	1,108 x 696 x 208.7 / 10.9kg
	W x H x D / weight (packing)	808 x 512 x 142 / 7.3kg	1,060 x 662 x 142 / 11.5kg	1,197 x 755 x 162 / 14.1kg
POWER (Unit : Watts)	Voltage, Hz	100 - 240V, 50/60Hz		
	Max	45.3	62.0	61.0
	Typical	40.5	50.0	51.0
	Energy Saving (Min)	32.4	34.0	32.5
	Energy Saving (Med)	22.3	24.0	23.9
	Energy Saving (Max)	10.8	11.0	14.2
	Stand-by	0.5	0.5	0.3
ECO	ErP Class	A+	A+	A++
	On Power Consumption (Watts)	30	44	42
	Luminance Ratio (%)	65		
	Mercury Content (mg)	0		
	Presence of Lead	Yes		
	Average Annual Consumption (kWh)	44	64	61
STANDARD APPROVAL	Safety	CB, CU TR		
	EMC	CE		
	ETC	RoHS, ErP		
HOSPITALITY FEATURES		8806087588262	8806087588682	TBD

Connessioni

55LV300C / 49LV300C / 43LV300C / 32LV300C

HDMI HIGH-DEFINITION MULTIMEDIA INTERFACE

1. LAN
2. USB IN
3. RS-232C IN
4. HDMI IN
5. ANTENNA / CABLE IN
6. COMPONENT IN / AV IN
7. H/P OUT
8. LNB Satellite IN

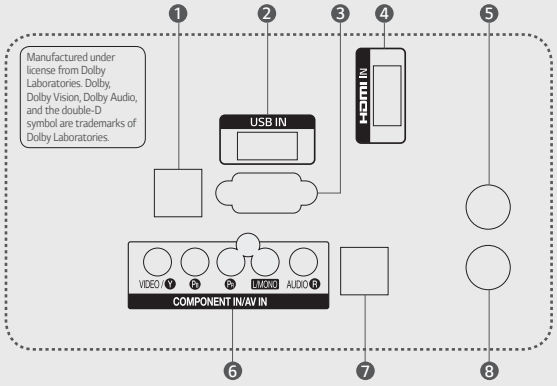

*I dati presenti in questa scheda tecnica sono soggetti a modifiche dovute ad aggiornamenti di prodotto. Vi invitiamo a consultare i manuali d'uso o il sito **www.lg.com/it** per verificare la congruità dei dati

32” / 43”

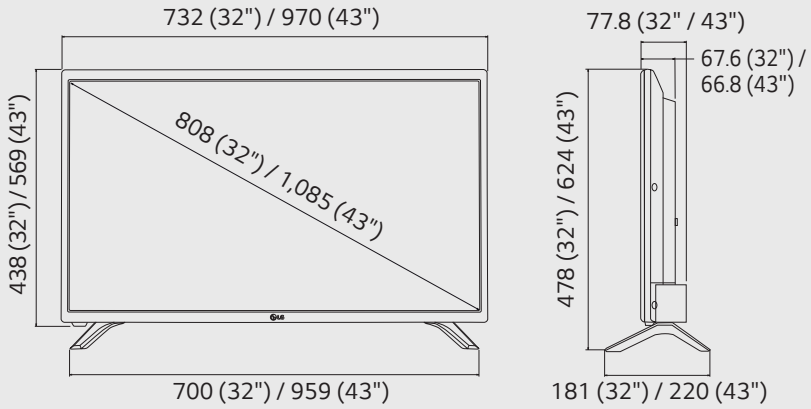
732 (32") / 970 (43")
808 (32") / 1,085 (43")
438 (32") / 569 (43")
700 (32") / 959 (43")
77.8 (32" / 43")
67.6 (32") /
66.8 (43")
478 (32") / 624 (43")
181 (32") / 220 (43")

49”

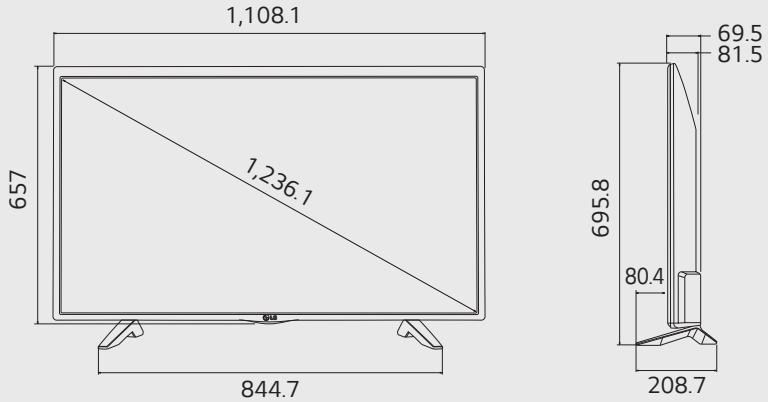
1,108.1
1,236.1
657
844.7
69.5
81.5
695.8
80.4
208.7

SCHEDE E DISEGNI TECNICI
2018

LG Business Solutions

COMMERCIAL LITE
HD READY

LW341C
28" | 24"

LW341C | Scheda Tecnica

LG Business Solutions

			24	28
DISPLAY	Type		Edge LED	
	Resolution		1,366 x 768 (HD)	
	Brightness		250cd/m^2	300cd/m^2
BROADCASTING SYSTEM	Analog		PAL / SECAM	
	Digital		DVB-T2/C/S2	
VIDEO	Triple XD Engine		•	
	Real Cinema 24p (3:3 Pull down)		•	
	Aspect Ratio		6 modes (16:9, Original, 4:3, Vertical Zoom, All-Direction Zoom, Just Scan)	
AUDIO	Audio Output / Speaker System		5W + 5W / 2.0 ch	
	Sound Mode		6 modes (Standard, News, Music, Cinema, Sport, Game)	
	Clear Voice		•	
GENERAL FEATURES	Management		Self Diagnostics (USB)	
	Interactivity		HTNG / HDMI-CEC	
	RJP Interface		RS232C, HDMI	
	Advanced Setting Option		Auto Off / Auto Sleep, Motion Eye Care, Smart Energy Saving	
	Anti-theft System		Kensington Lock	
COMMERCIAL FEATURES			Hotel Mode, Lock Mode, IR Out, External Speaker Out, USB Cloning, One Channel Map, Multi IR Code, Welcome screen/Video, USB Auto Playback+, Time Scheduler	
INTERFACE	Side		Headphone Out, HDMI In, USB 2.0, CI Slot	
	Rear		RF In (2), Component In (Video, RCA5), Component In (Audio, RCA5), Optical Audio Out, HDMI/HDCP Input, RGB In, PC Audio Input (Sharing with Component), RS 232C, LAN (MHEG / SERVICE), External Speaker Out	
CABINET (Unit : mm / kg)	Vesa		75 x 75	100 x 100
	W x H x D / weight (With Stand)		556 x 384.3 x 140.6 / 3.7kg	641.5 x 430 x 175 / 4.9kg
POWER	Voltage, Hz		100 ~ 240V, 50/60Hz	
	Max (Watts)		42.3	43.2
	Typical (Watts)		29.8	36.2
	Energy saving (Min)		23.8	29
	Energy saving (Med)		16.4	19.9
	Energy saving (Max)		9	10.9
	Stand-by (Watts)		0.5↓	
STANDARD APPROVAL	Safety		CB, CU TR	
	Environment		CE	
	Etc.		RoHS, ErP	
	Eco	ErP Class	A	TBD
		On Power Consumption	25	28
		Luminance Ratio (%)	65	
		Mercury Content (mg)	0	
		Presence of Lead	Yes	
		Average Annual Consumption (kWh)	37	41
EAN			8806084262479	8806084262349

Connessioni

28LW341C / 24LW341C

HDMI HIGH-DEFINITION MULTIMEDIA INTERFACE

1. EXTERNAL SPEAKER OUT
2. LAN (MHEG / SERVICE)
3. HDMI IN 1
4. RGB IN (PC)
5. OPTICAL DIGITAL AUDIO OUT
6. RS-232C IN
7. COMPONENT IN / AV IN
8. LNB Satellite IN
9. ANTENNA / CABLE IN

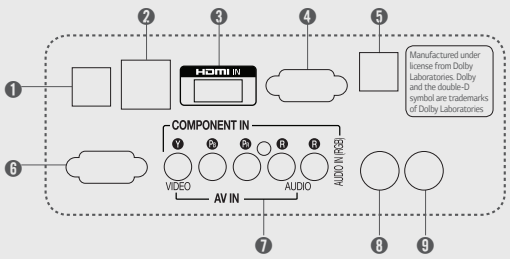

*I dati presenti in questa scheda tecnica sono soggetti a modifiche dovute ad aggiornamenti di prodotto. Vi invitiamo a consultare i manuali d'uso o il sito **www.lg.com/it** per verificare la congruità dei dati

LW341C | Disegno Tecnico

28” / 24”

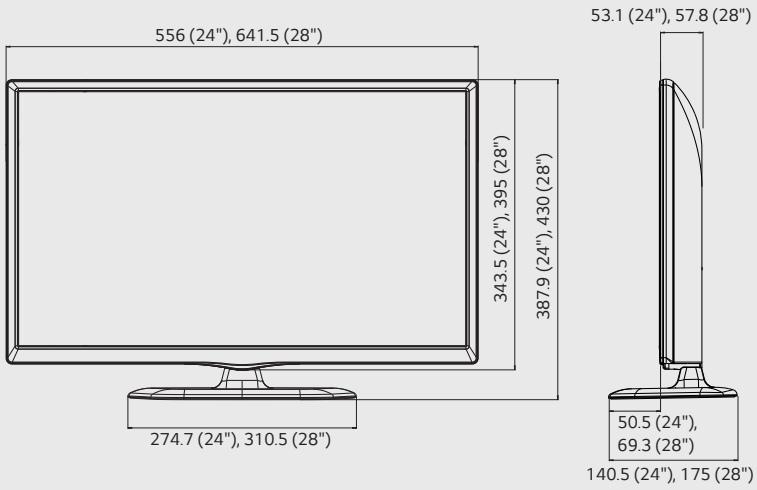

SCHEDE E DISEGNI TECNICI
2018

LG | Business Solutions

COMMERCIAL LITE
SUPERSIGN TV

LV640S
55” | 49” | 43”

LV640S | Scheda Tecnica

LG Business Solutions

		43	49	55
DISPLAY	Type	Direct LED		Edge LED
	Resolution	1,920 x 1,080 (FHD)		
	Brightness	400cd/m²		
	Viewing Angle Degree	178° / 178°		
	Response Time	9		
BROADCASTING SYSTEM	Analog	PAL/SECAM		
	Digital	DVB-T2/C/S2		
VIDEO	Picture Engine	XD Engine		
	Real Cinema 24p (3:3 Pull down)	•		
	Aspect Ratio	• 8 modes (16:9, Just scan, Original, Full Wide, 4:3, 14:9, Cinema Zoom 1, Zoom)		
AUDIO	Audio Output / Speaker System	10W + 10W / 2.0 ch		
	Sound Mode	• 6 modes (Standard, Cinema, Clear Voice, Sports, Music, Game)		
	Clear Voice	• (Clear Voice III)		
SMART FEATURES	Smart UX	webOS 3.5, Commercial Smart Home, Web Browser, Pre-loaded YouTube Apps, Magic Remote (Optional)		
	Connectivity	SoftAP, WiFi, SmartShare, ScreenShare (Miracst), DIAL, Bleutooth Sound Sync		
HOSPITALITY FEATURES		Hotel Mode, Lock Mode, Welcome Screen, Insert Image, One Channel Map, External Speaker Out, Content Manager, Group Manager, Crestron Connected® Certification, RTC (Real Time Clock), NTP sync timer		
GENERAL FEATURES	Installation	USB Cloning		
	Management	WOL (Wake on LAN), SNMP (Simple Network Management Protocol), TVLink Tuner, Self Diagnostics, IR Out, Multi IR Code, HDMI-CEC		
	Setting Option	Auto Off/Sleep Timer, Smart Energy Saving, Motion Eye care		
LG SOFTWARE COMPATIBILITY		Simple Editor, SuperSign™ W, SuperSign™ Link		
INTERFACE	Side	HDMI In, USB (2), CI Slot		
	Rear	RF(2), AV In, Component In (RCA5), Digital Optical Audio Out, HDMI Input (2), RGB In, RS-232C, PC Audio Input (Sharing with Component Audio), Headphone Out, RJ45 (Ethernet), External Speaker, Debug (Service)		
DIMENSION (Unit : mm)	Vesa	200 x 200	300 x 300	
	W x H x D / weight (with stand)	974 x 625 x 220 / 9.3kg	1,107 x 701 x 235 / 11.4kg	1,241 x 775 x 216 / 16.6kg
	W x H x D / weight (Packing)	1,060 x 660 x 152 / 11.3kg	1,193 x 770 x 158 / 13.5kg	1,360 x 835 x 152 / 21.3kg
POWER (Unit : Watts)	Voltage, Hz	100 ~ 240V, 50/60Hz		
	Max	97.0	103.0	132.0
	Typical	75.0	81.5	109.0
	Energy Saving (Min)	47.0	52.0	70.0
	Energy Saving (Med)	33.0	34.0	39.0
	Energy Saving (Max)	18.0	22.0	31.0
	Stand-by	0.3		
ECO	ErP Class	A	A+	
	On Power Consumption (Watts)	62	69	84
	Luminance Ratio (%)	65		
	Mercury Content (mg)	0		
	Presence of Lead	Yes		
	Average Annual Consumption (kWh)	86	96	117
STANDARD APPROVAL	Safety	CB, CU TR		
	Environment	CE		
	ETC	RoHS, Erp		
EAN		8806084644800	8806084674982	8806084675484

Connessioni

55LV640S / 49LV640S / 43LV640S

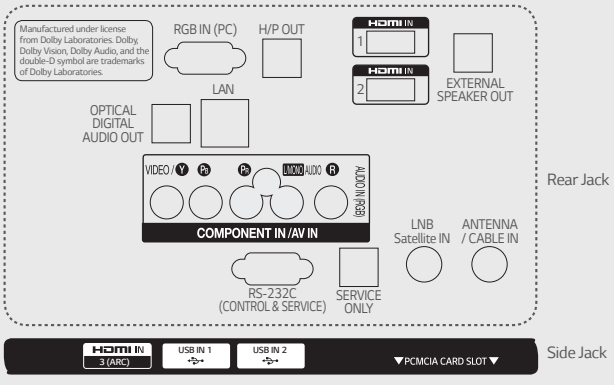

*I dati presenti in questa scheda tecnica sono soggetti a modifiche dovute ad aggiornamenti di prodotto. Vi invitiamo a consultare i manuali d'uso o il sito **www.lg.com/it** per verificare la congruità dei dati

LV640S | Disegno Tecnico

43"

974 x 625 x 221 / 9.3

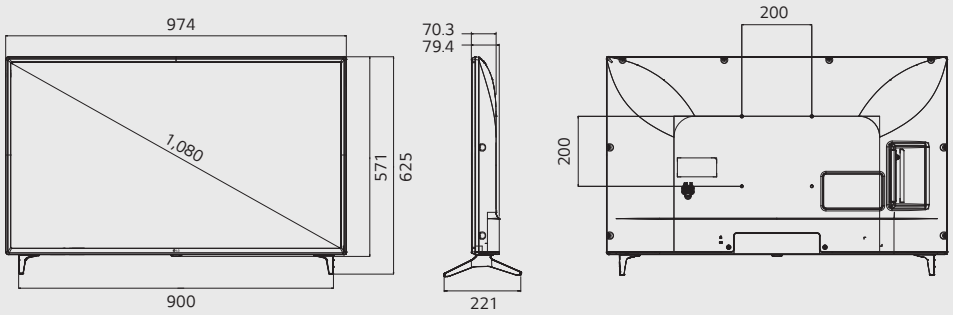

49"

1,106 x 701 x 235 / 11.4

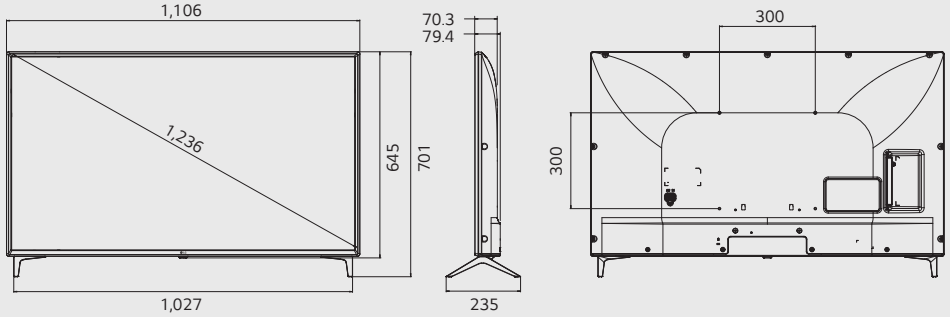

55"

1,240 x 775 x 216 / 16.6

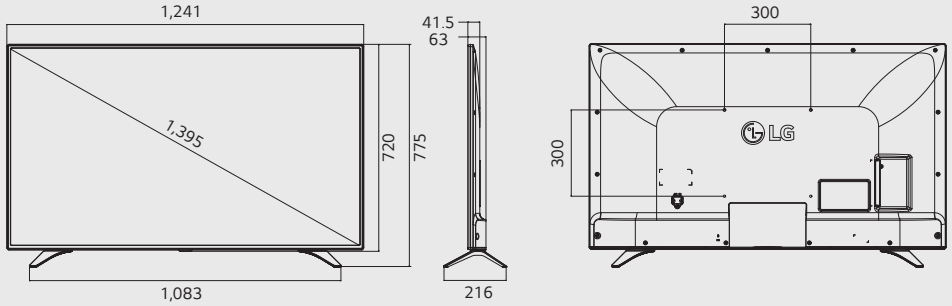

LG Business Solutions

RTR di Cabella
Via G. da Verrazzano, 51 - 10129 Torino
Tel. 011 501012, tel/fax 011 599405
info@rtrdicabella.com www.rtrdicabella.com

Seguici sui nostri canali digitali

www.lgbusiness.it www.facebook.com/LGInformationDisplay/ www.linkedin.com/company/lginformationdisplay www.youtube.com/c/LGECommercialDisplay

Per ricevere ulteriori informazioni contatta il team di LG Italia all'indirizzo *b2b.italy@lgepartner.com*